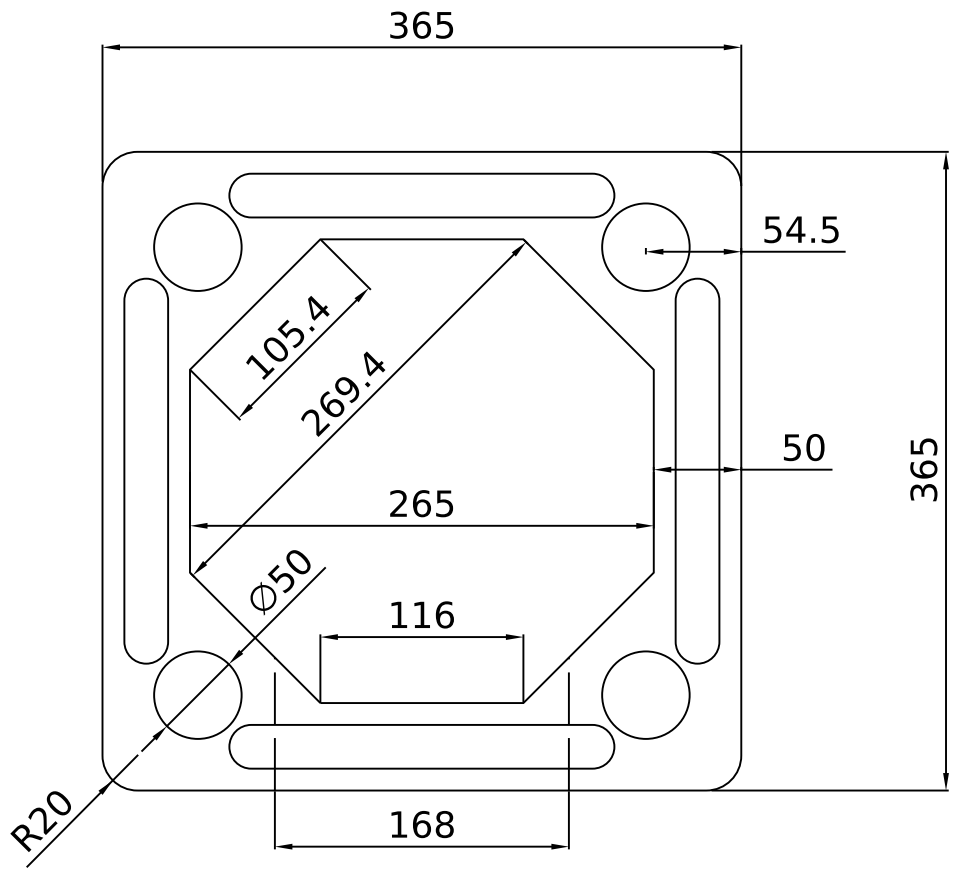

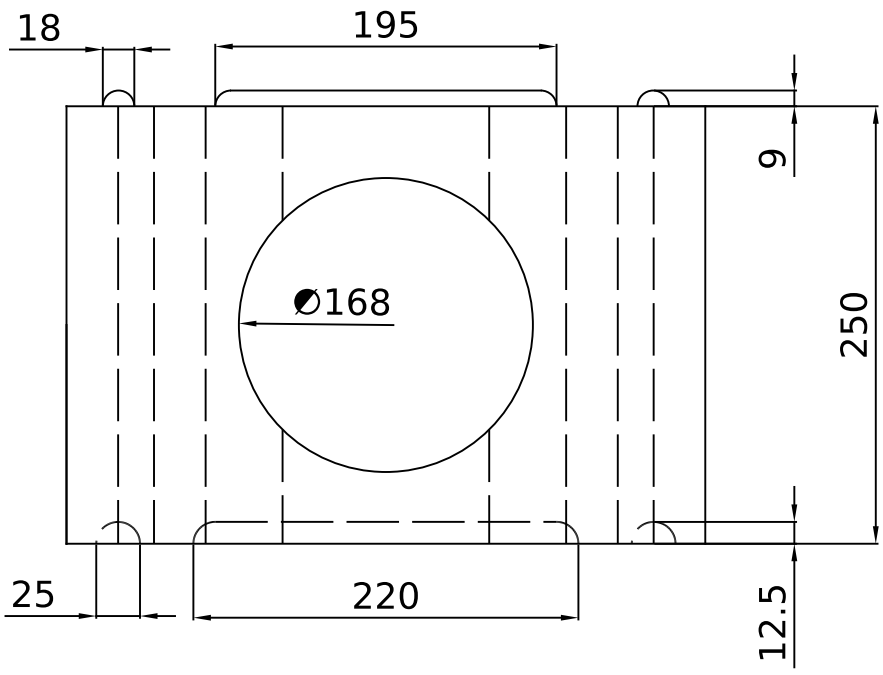

	Product: DM 36 Casing with Ø168 Access Hole			
	Mat.: Pumice	Scale: 1:5	Dato: 070699	Part.nr.: S-803637
Areal: 6,5902 dm²	Tol.: Længde = ± 7 mm Diameter = ± 3 mm Godstykkelse = +12% -5%		Rev.: 050804	
Vol.: 15,278 l.				

Isokern DM36 Access Casing (130712)

Dimensions in mm. Indicative only, check with us before construction. www.isokernshop.co.uk