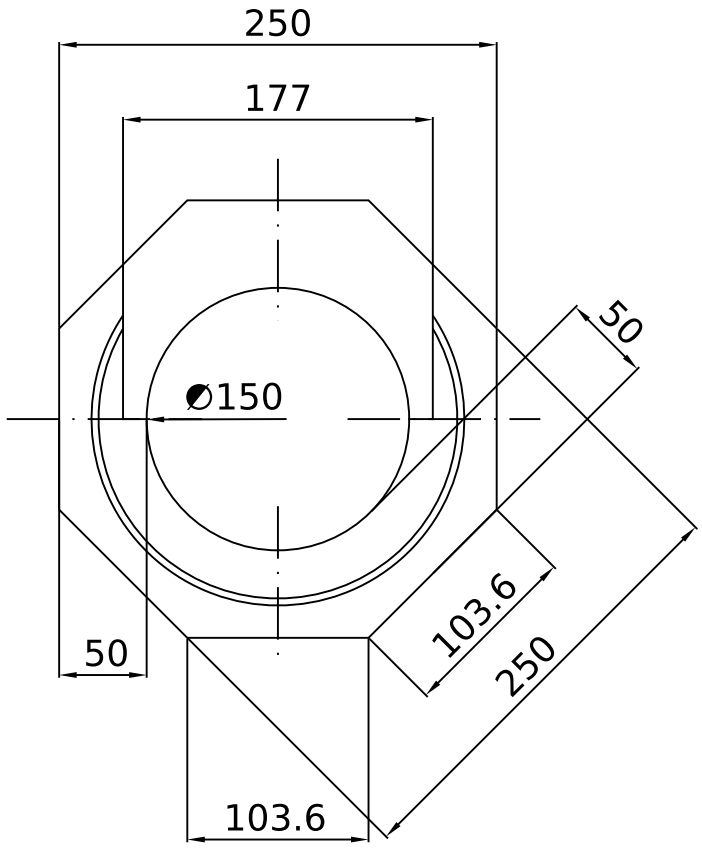

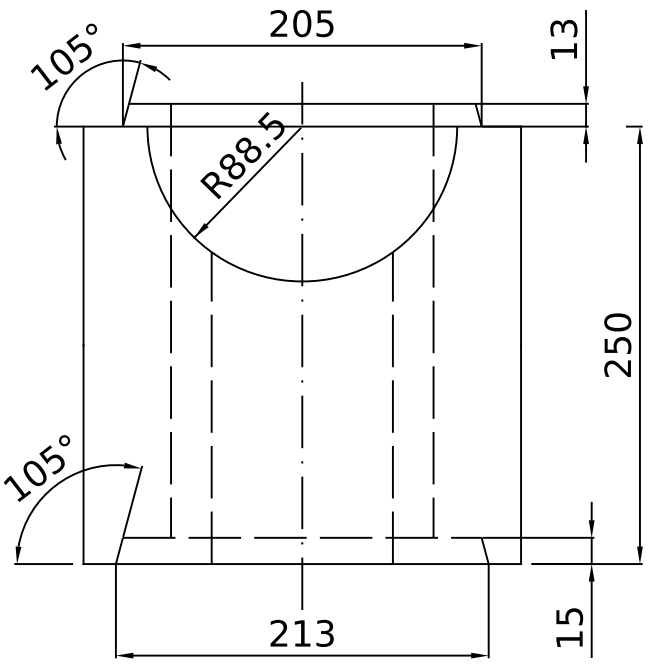

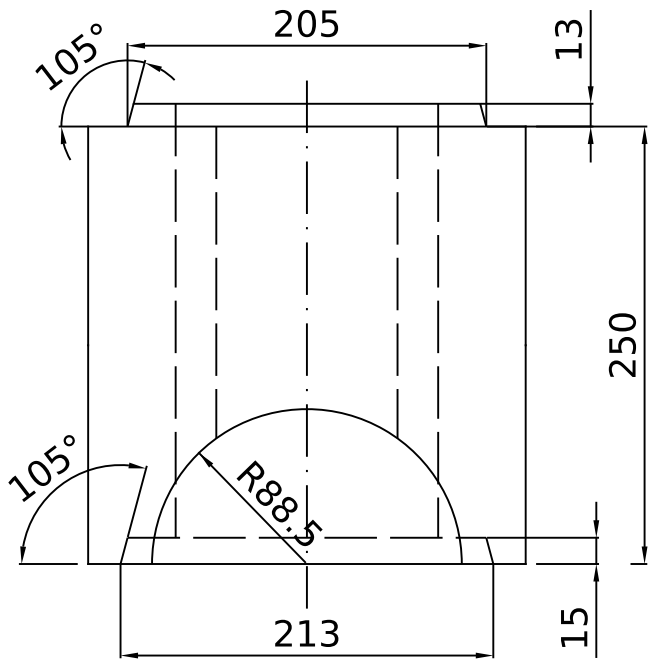

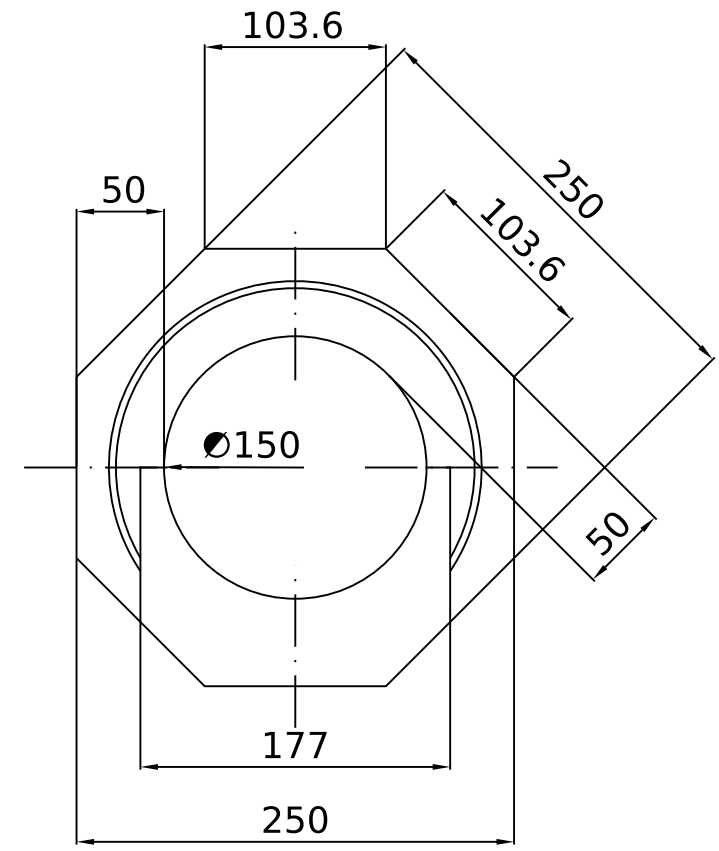

DM
36
Ø150mm
Access
Flue
Block

Areal: 2,2165 dm²	Product:			
Vol.: 7,696 l.	Mat.: Pumice	Scale: 1:5	Dato: 061101	Part.nr.: S-801516
	Tol.: Længde = ± 7 mm Diameter = ± 3 mm Godstykkelse = +12% -5%		Rev.: 150208	

Isokern DM36 Access Flue Block (126368)

Dimensions in mm. Indicative only, check with us before construction. www.isokernshop.co.uk