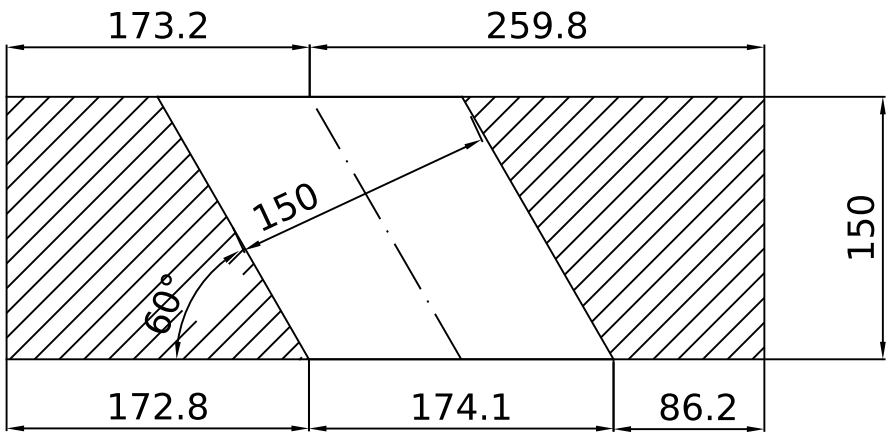

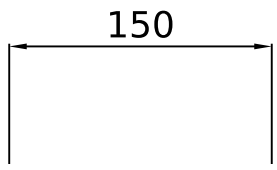

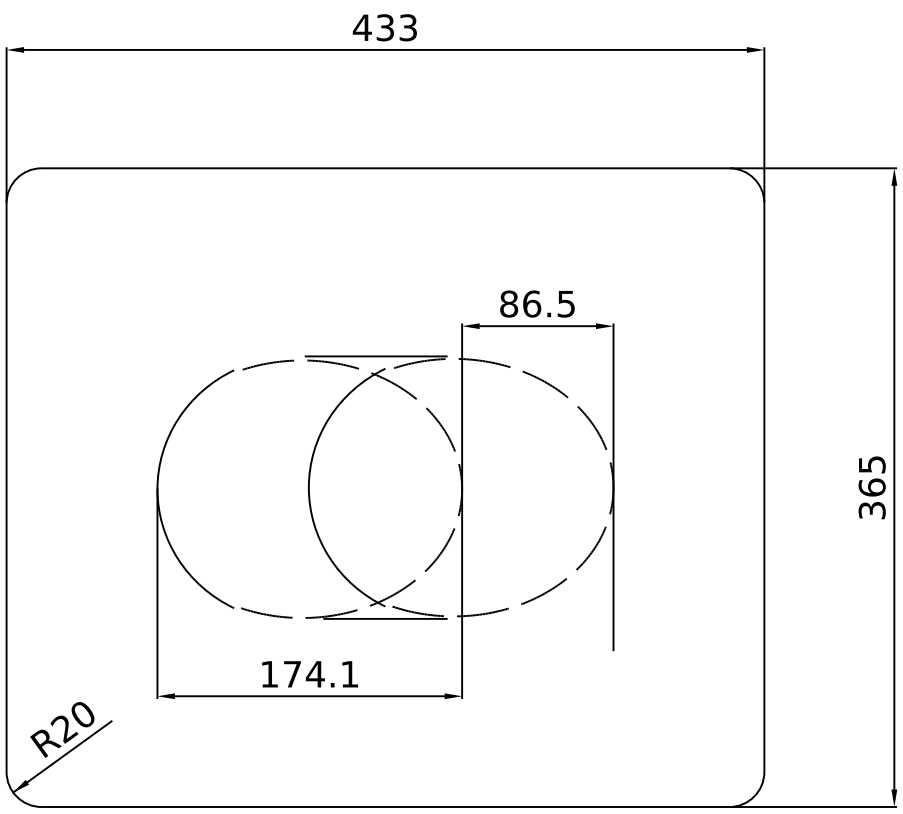

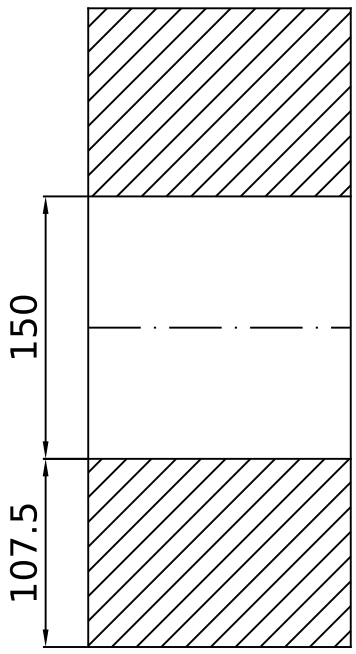

	Product: DM 36 Ø150mm Offset block			
	Mat.: Pumice	Scale: 1:5	Dato: 261000	Part.nr.: 80143
Areal: 13,8203 dm^2	Tol.: Længde = ± 7 mm Diameter = ± 3 mm Godstykkelse = +12% -5%		Rev.: 061205	
Vol.: 21,005 l.				

Isokern DM36 Offset Block (126378)

Dimensions in mm. Indicative only, check with us before construction. www.isokernshop.co.uk