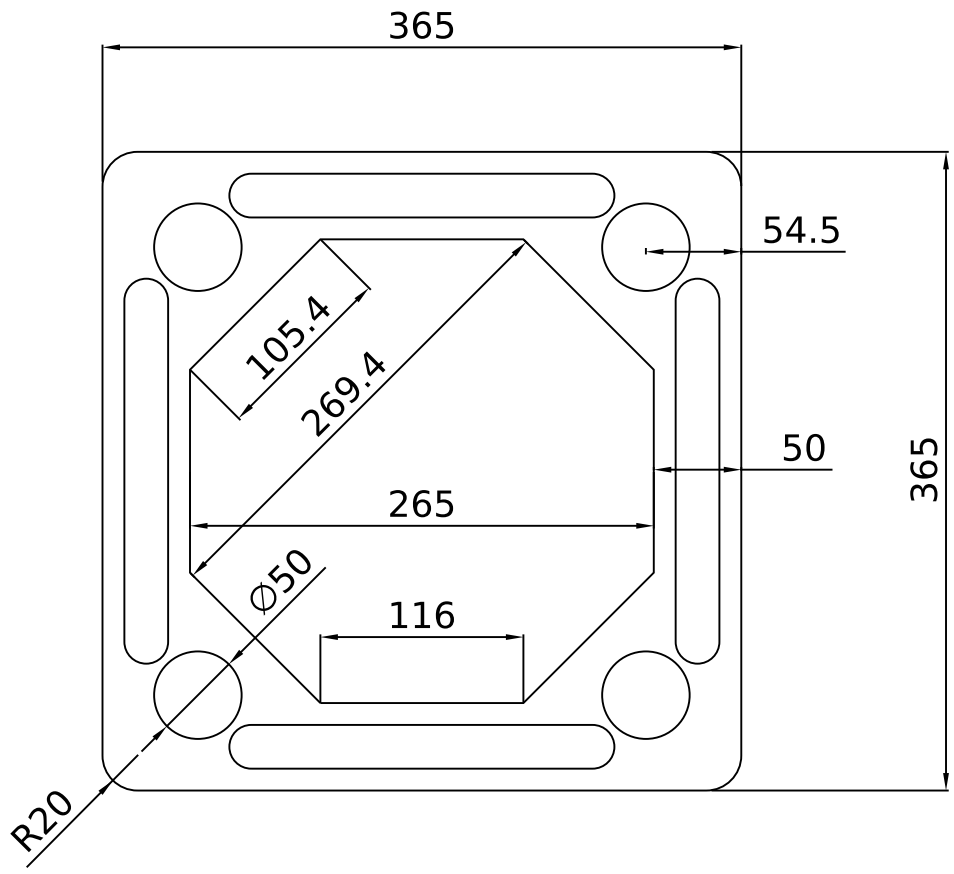


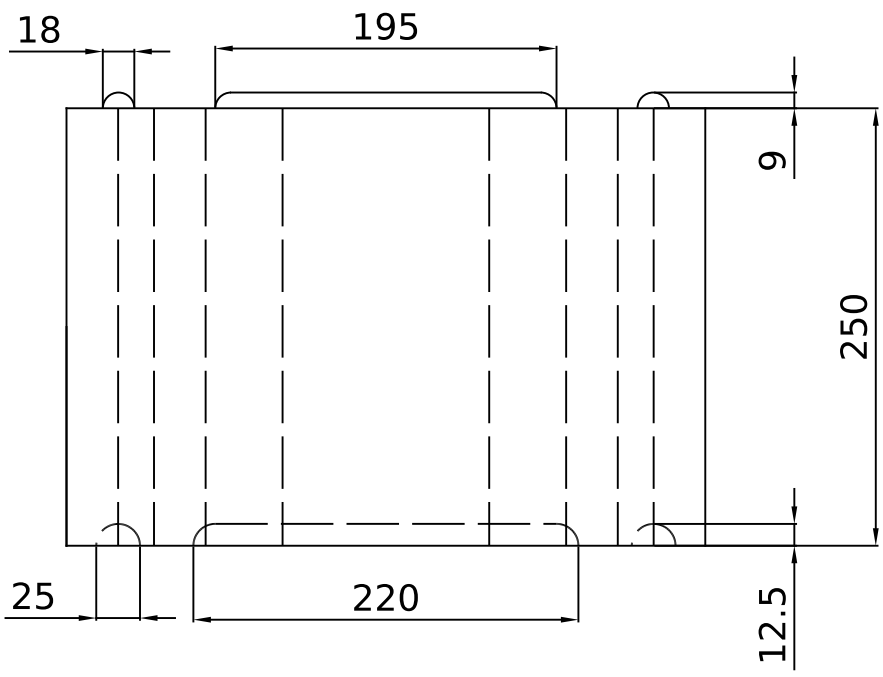


| | | | | |
|---|---|---|---|---|
| | Product: DM 36 Outer Casing | | | |
| | Mat: Pumice | Scale: 1:5 | Dato: 070699 | Part.nr.: S-803636 |
| Areal: 6,5902 dm² | Tol.: Længde = ± 5 mm | | Rev.: 061205 | |
| Vol.: 16,476 l. | Godstykkelse = +12% -5% | | | |

**Isokern DM36 Outer Casing (130714)**

Dimensions in mm. Indicative only, check with us before construction. www.isokernshop.co.uk