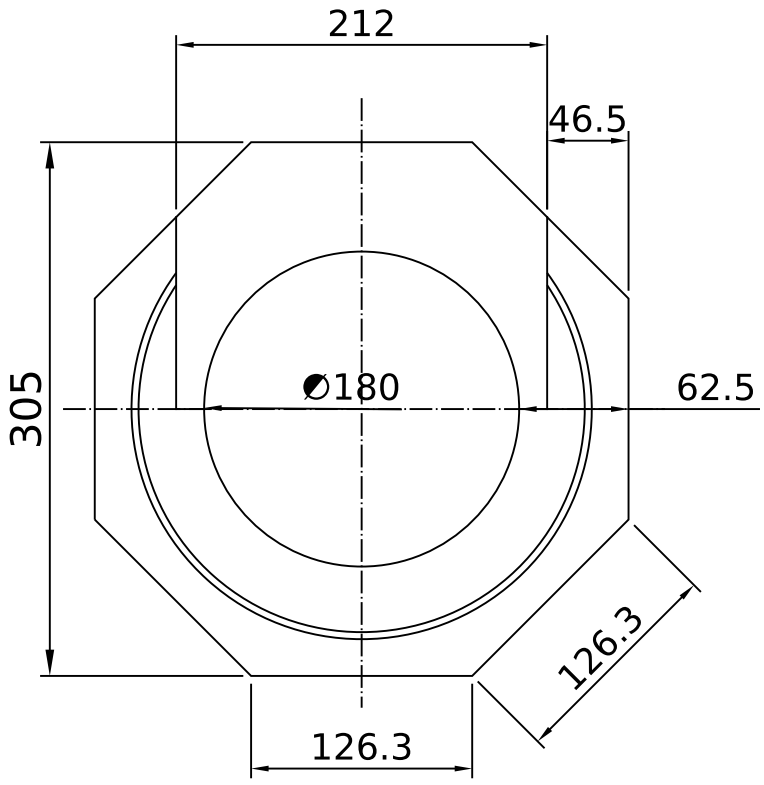


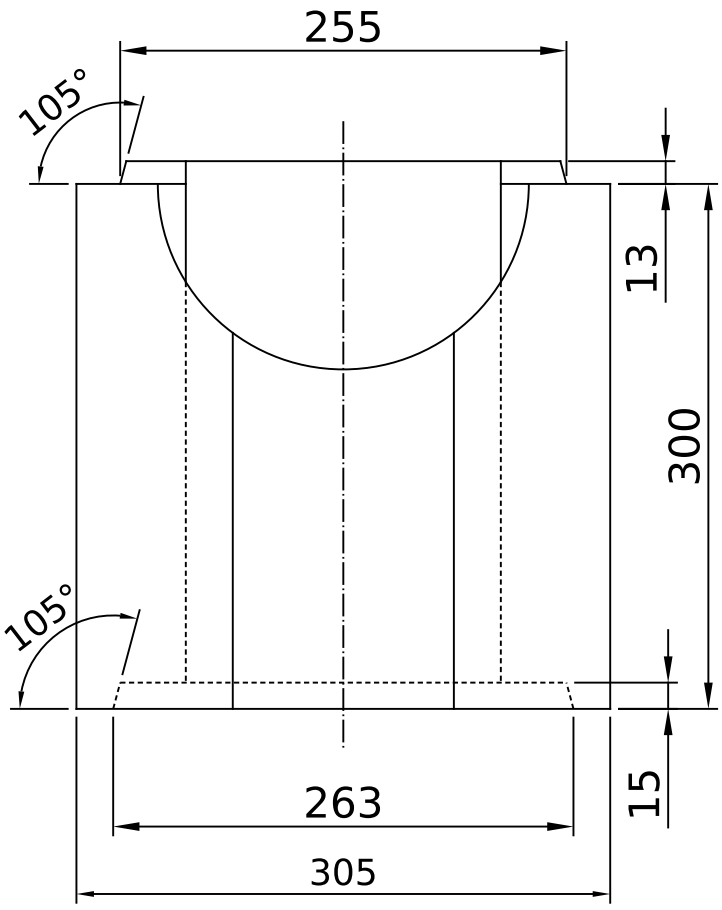


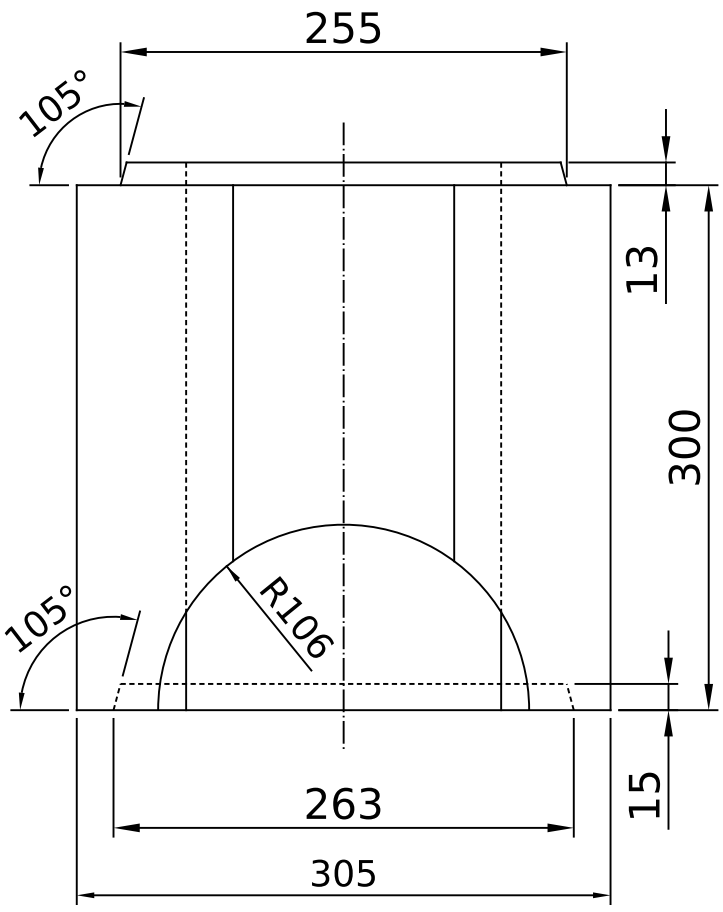


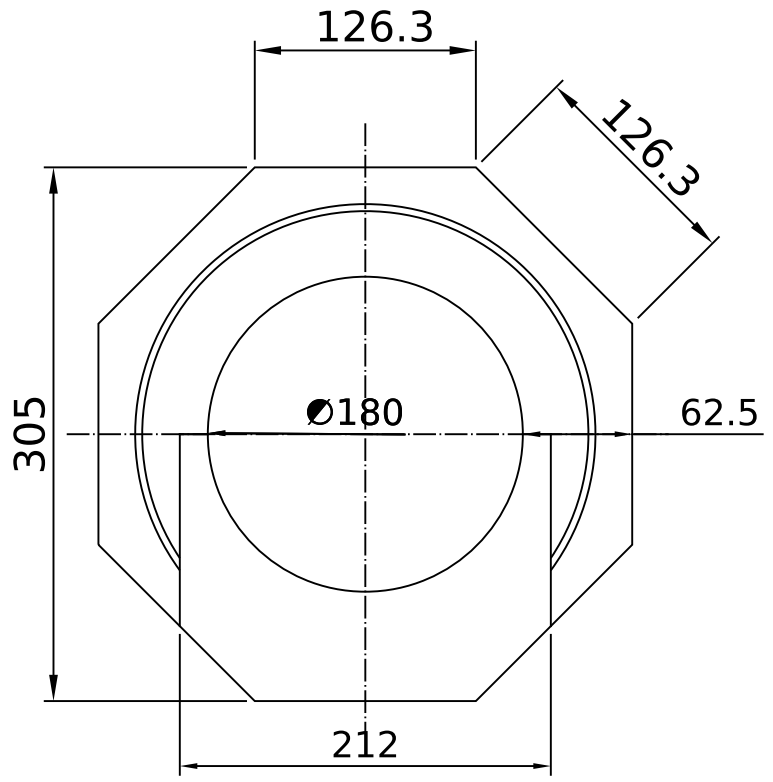


| | | | | |
|---|---|---|---|---|
| | Emne: DM 44 - DM 80 Ø18 cm Indermodul m/½ hul | | | |
| | Mat.: Pimpsten | Mål: 1:5 | Dato: 17.11.2011 | Tegn.nr.: 913180040 |
| Areal: 3,4 dm² | Tol.: Længde = ± 7 mm<br>Diameter = ± 3 mm<br>Godstykkelse = +12% -5% | | Rev.: | |
| Vol.: 14,3 l. | | | | |

**Isokern DM44 180mm Access Block (130717)**

Dimensions in mm. Indicative only, check with us before construction. www.isokernshop.co.uk