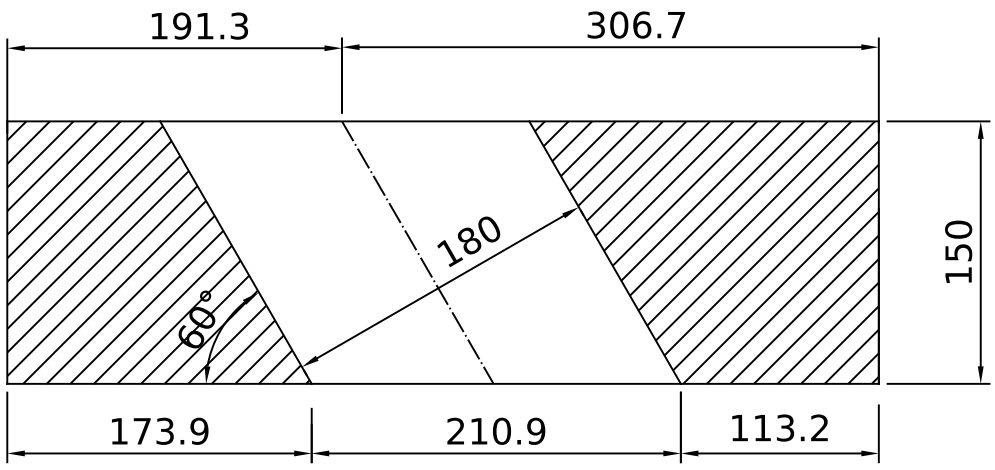

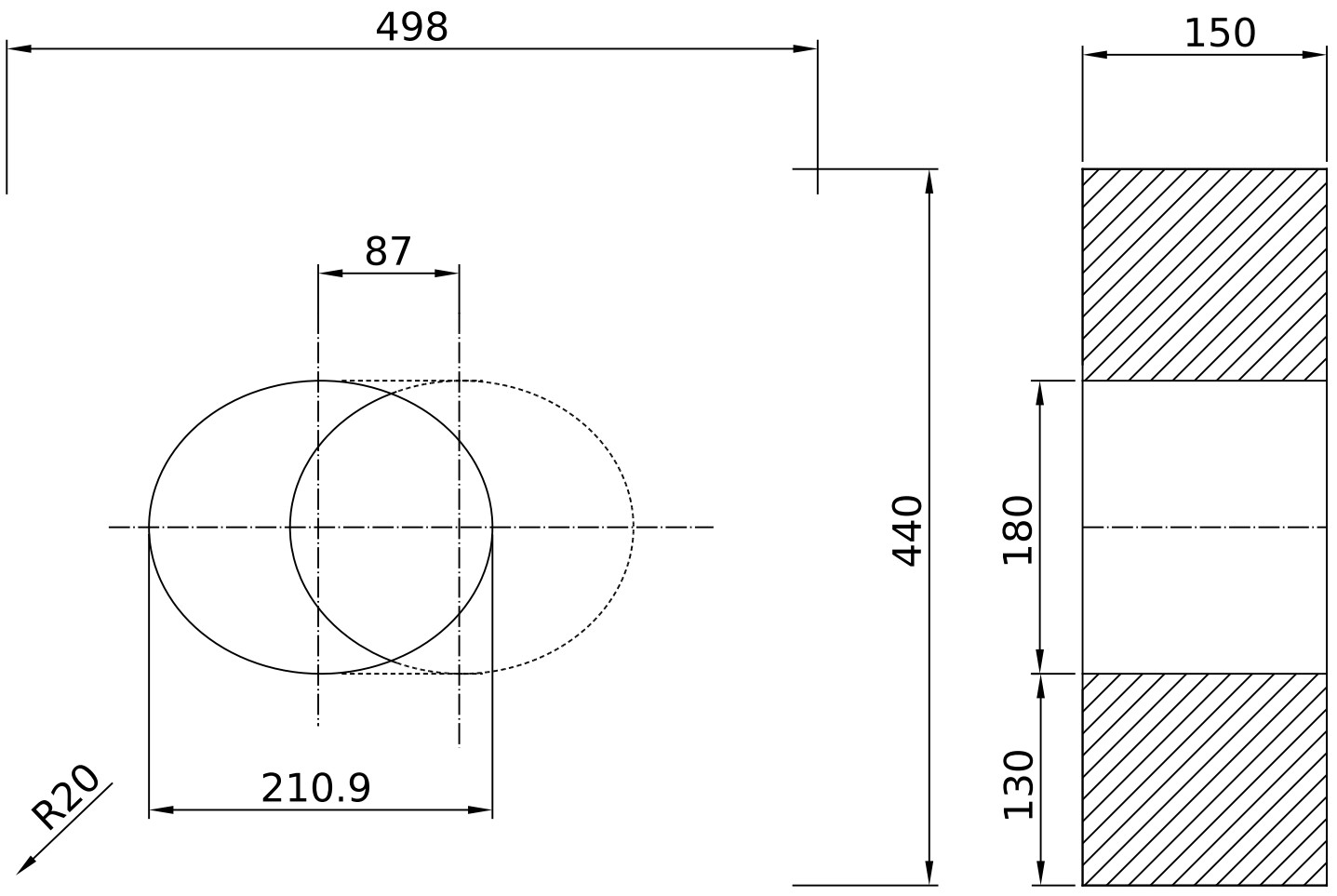

	Emne: DM 44 Ø18 cm Offsetblok			
	Mat.: Pimpsten	Mål: 1:5	Dato: 18.12.2013	Tegn.nr.: 912430460
Areal: 18,9 dm²	Tol.: ± 7 mm		Rev.:	
Vol.: 29,0 l.				

Isokern DM44 180mm Offset Block 150mm High (130718) Dimensions in mm. Indicative only, check with us before construction. www.isokernshop.co.uk