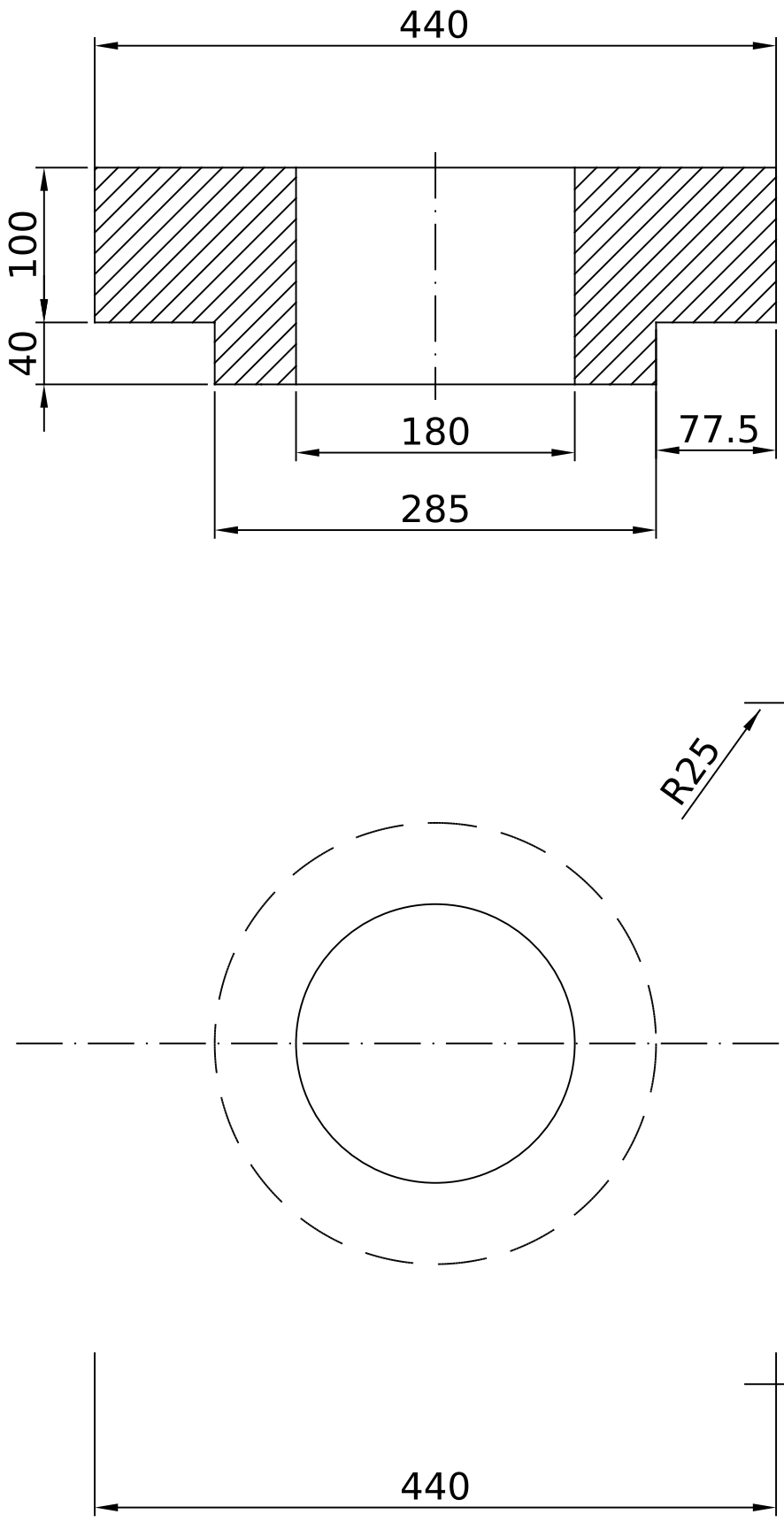

	Product: DM 44 Support Block, Ø180mm			
	Mat.: Pumice	Scale: 1:5	Dato: 310306	Part.nr.: 40126
Areal: 16,7616 dm²	Tol.: ± 3 mm		Rev.:	
Vol.: 18,9928 l.				

Isokern DM44 180mm Support Block (130721)

Dimensions in mm. Indicative only, check with us before construction. www.isokernshop.co.uk