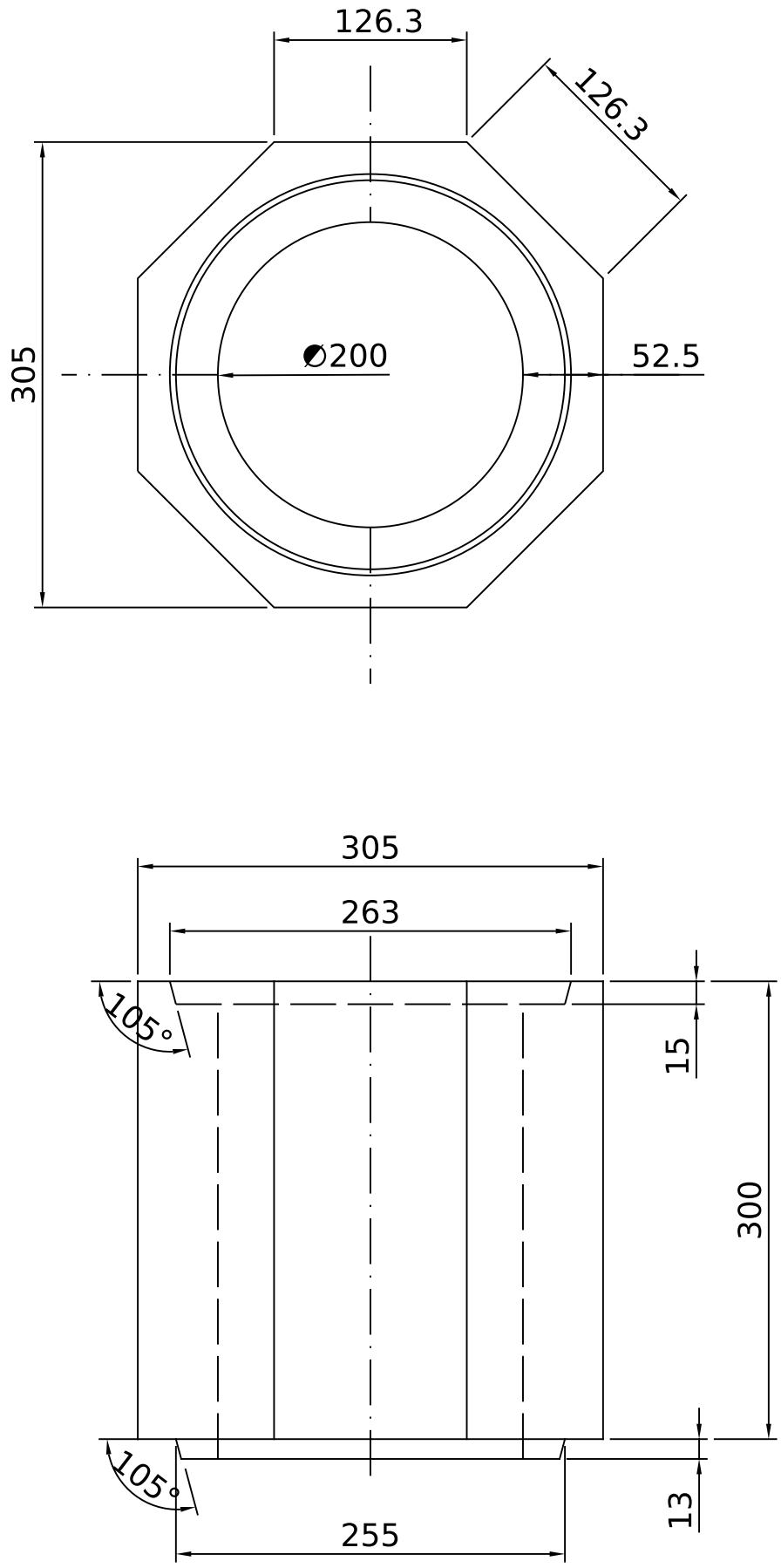

	Product: DM 44 Ø200mm Inner Flue Block			
	Mat.: Pumice	Scale: 1:5	Dato: 100699	Part.nr.: S-70220
Areal: 4,5649 dm²	Tol.: Længde = ± 7 mm Diameter = ± 3 mm Godstykkelse = +12% -5%		Rev.: 030804	
Vol.: 13,695 l.				

Isokern DM44 200mm Flue Block (127683)

Dimensions in mm. Indicative only, check with us before construction. www.isokernshop.co.uk