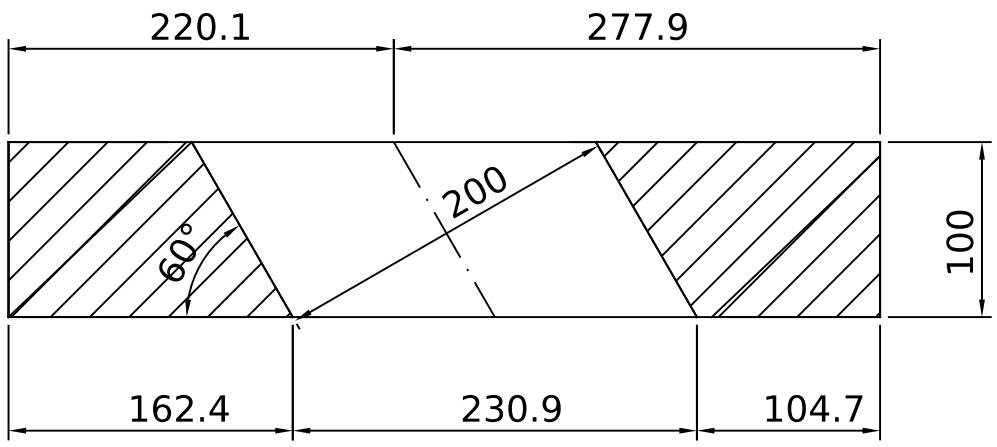

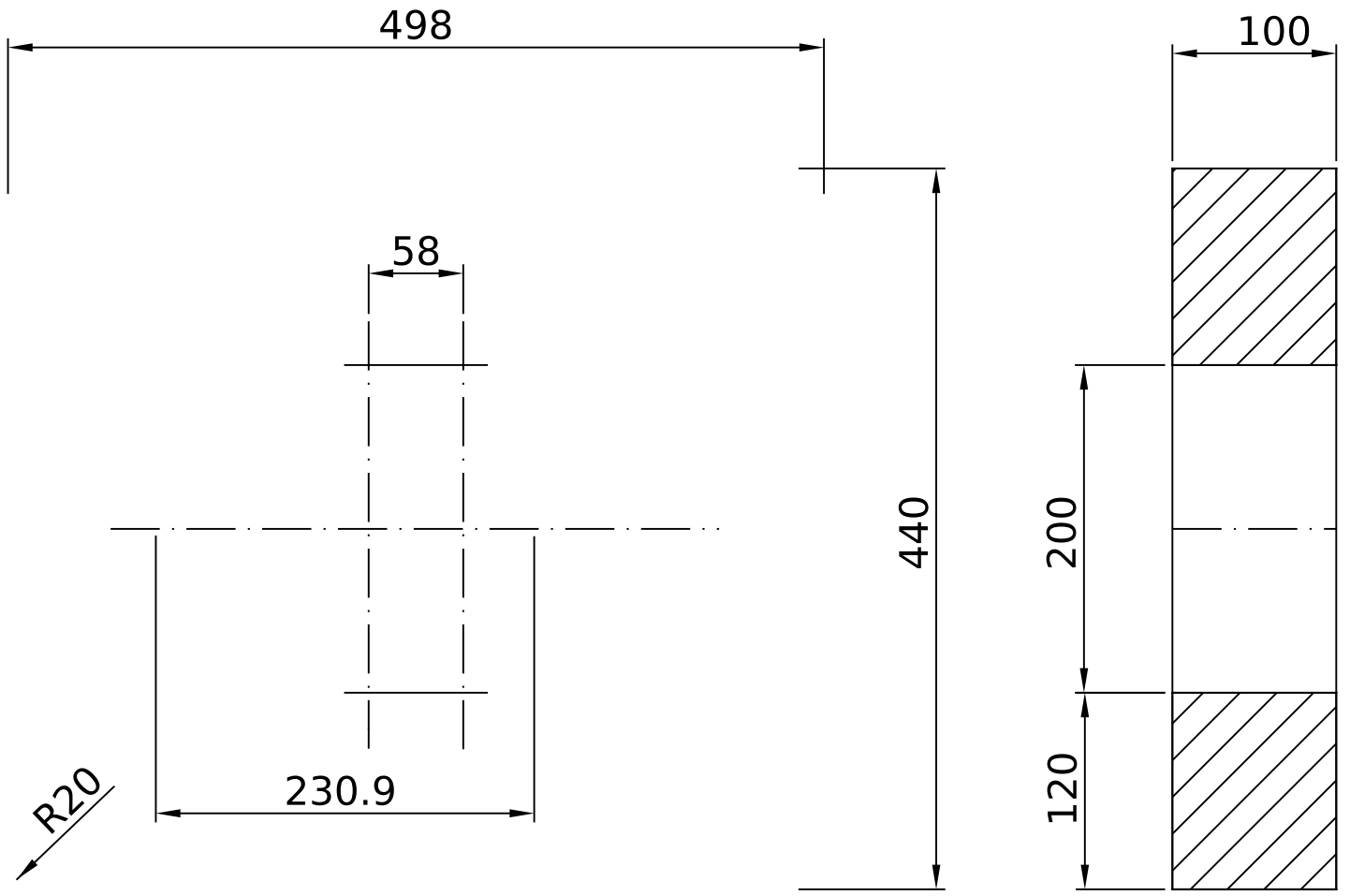

	Product: DM44 Ø200mm Offset Block			
	Mat.: Pumice	Scale: 1:5	Dato: 050500	Part.nr.: 40130
Areal: 18,250 dm^2	Tol.: ± 3 mm		Rev.: 011105	
Vol.: 18,736 l.				

Isokern DM44 200mm Offset Block 100mm High (127686) Dimensions in mm. Indicative only, check with us before construction. www.isokernshop.co.uk