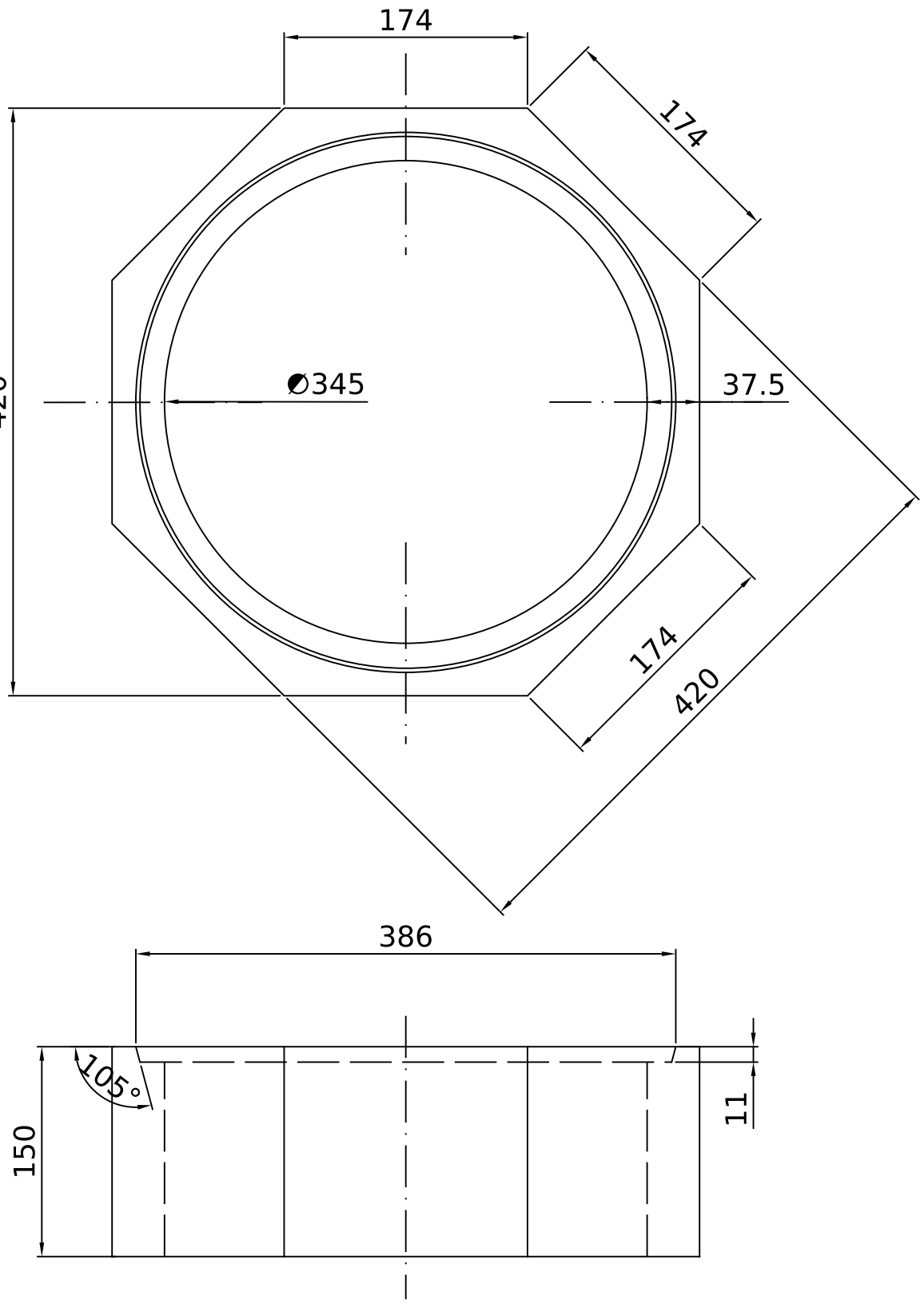


| | | | | |
|---|---|---|---|---|
| | Product: DM 54 Ø345mm Starter Flue Block | | | |
| | Mat.: Pumice | Scale: 1:5 | Dato: 021001 | Part.nr.: S-70003 |
| | Tol.: Længde = ± 7 mm<br>Diameter = ± 3 mm<br>Godstykkelse = +12% -5% | | Rev.: 280904 | |