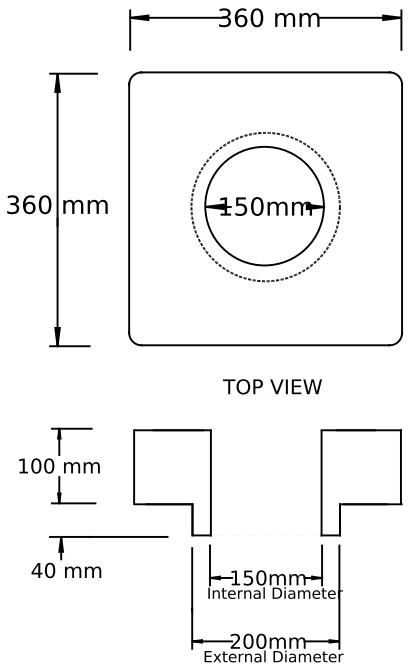

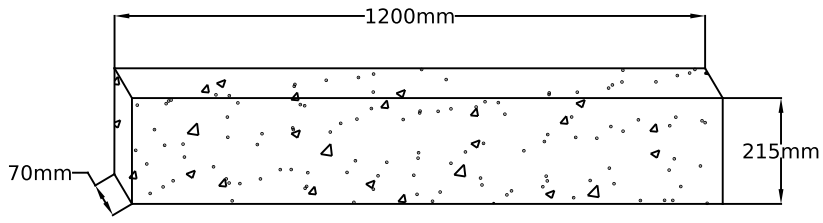

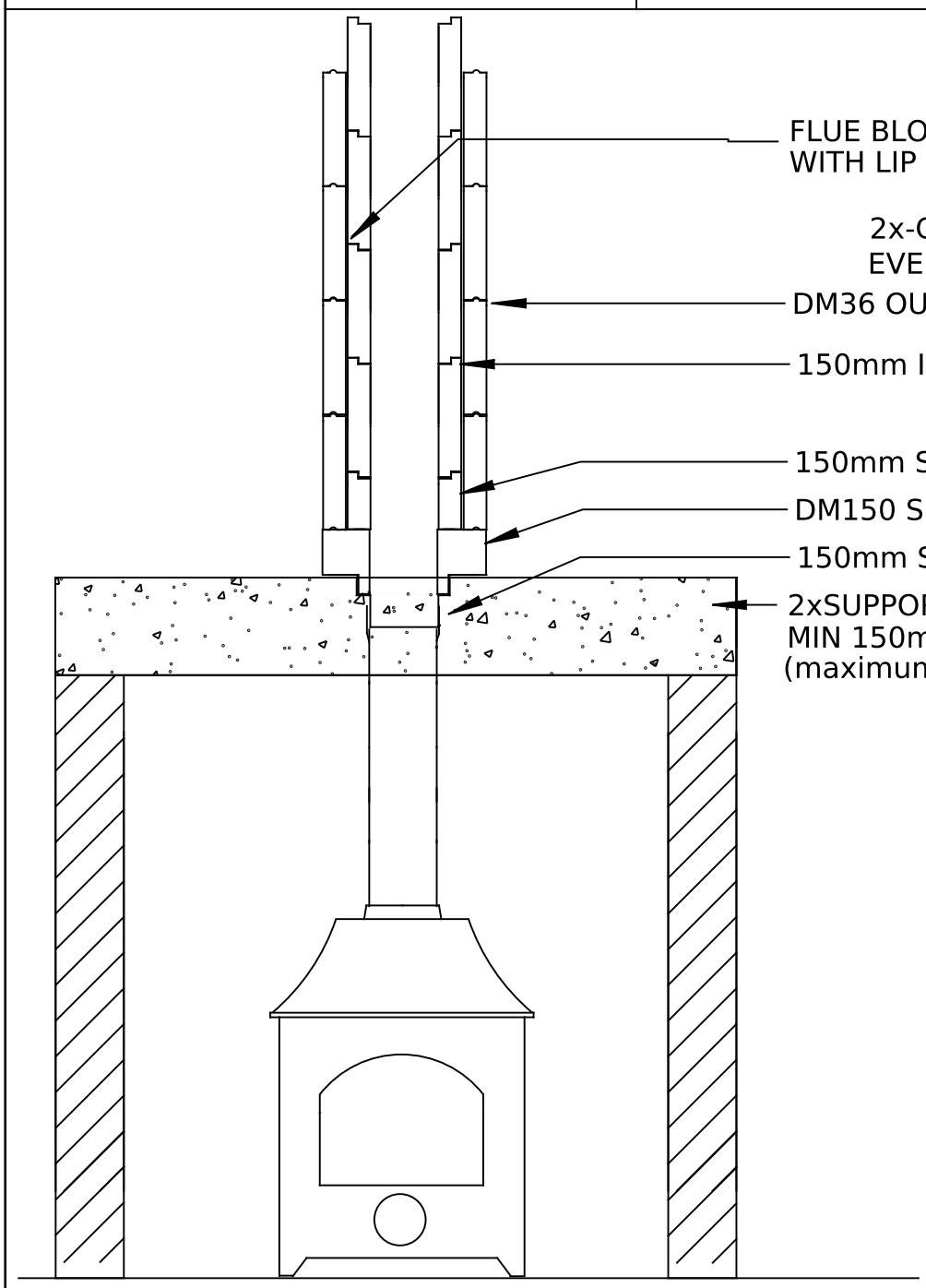

ELEVATIONAL SECTION

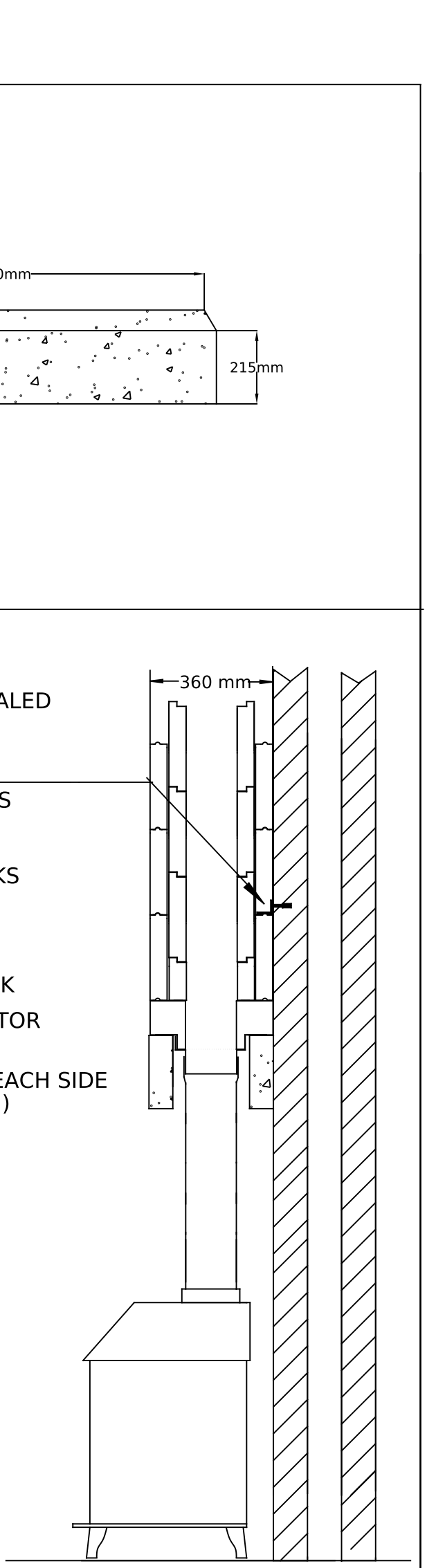

SIDE SECTION

DRAWING TITLE
DM36 CHIMNEY, SUPPORT BLOCK
AND SUPPORT LINTELS FOR
CONNECTING TO AN APPLIANCE

DRAWING NO	DM6-d2
SCALE	1:20
DATE	29-01-16