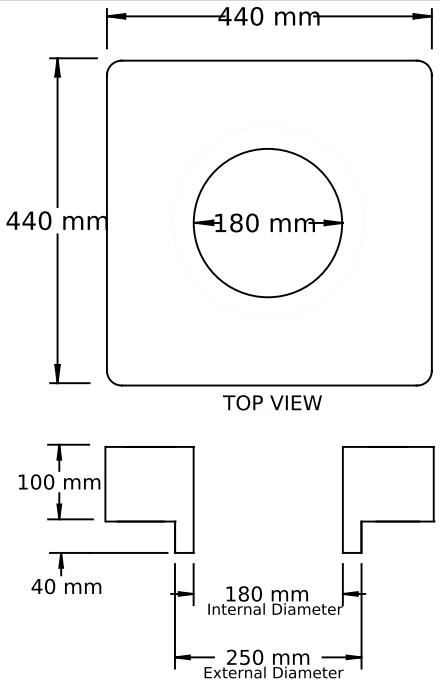

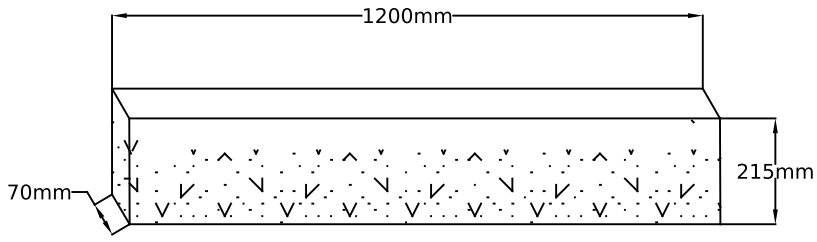

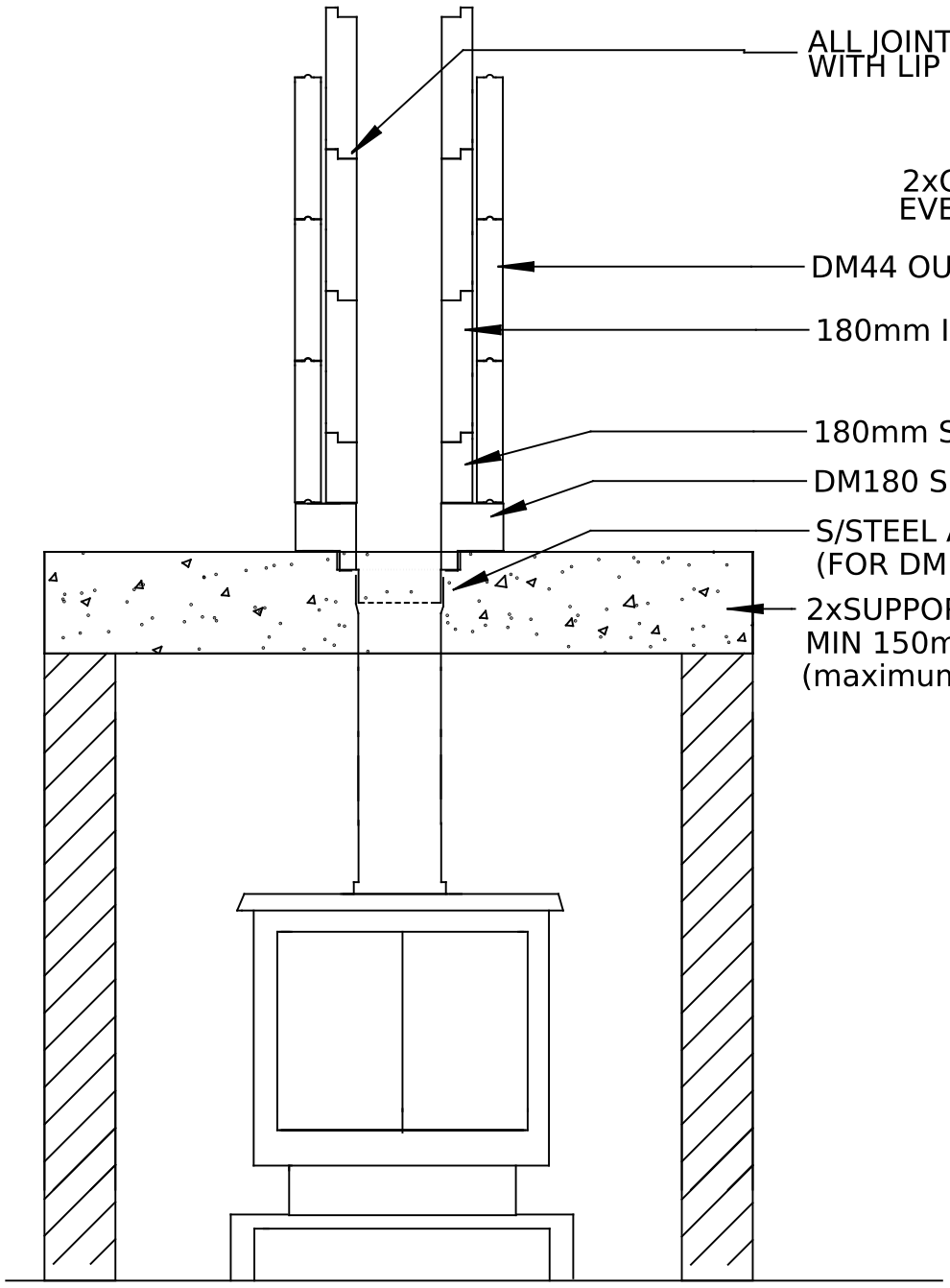

ELEVATIONAL SECTION

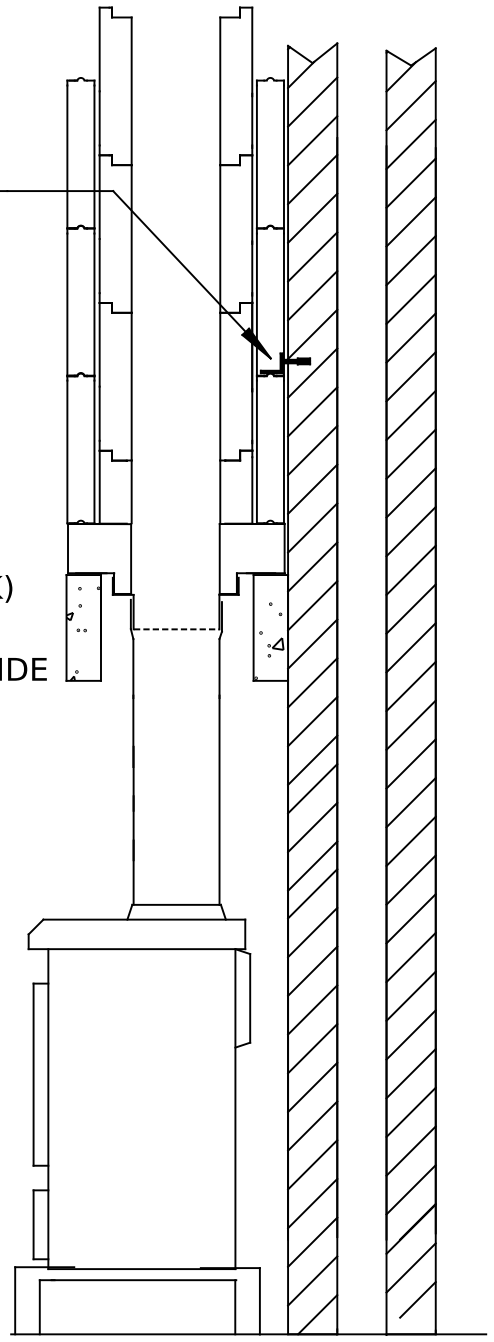

SIDE SECTION

DRAWING TITLE
DM180 SUPPORT BLOCK, CHIMNEY
AND SUPPORT LINTELS FOR
CONNECTING TO AN APPLIANCE

DRAWING NO	DM6b (180)
SCALE	1:20
DATE	29-01-16