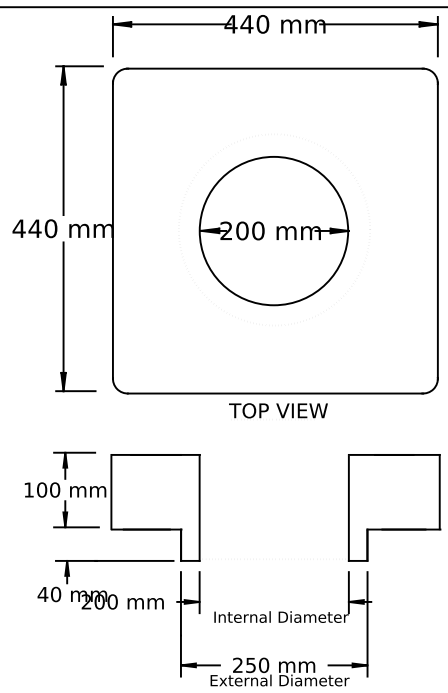

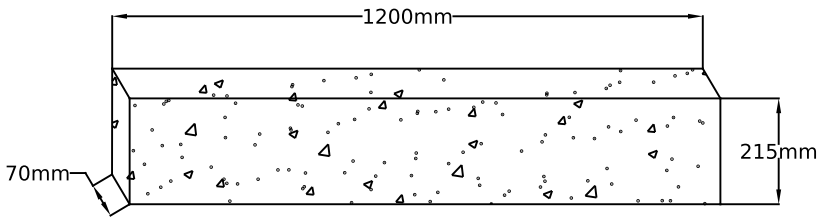

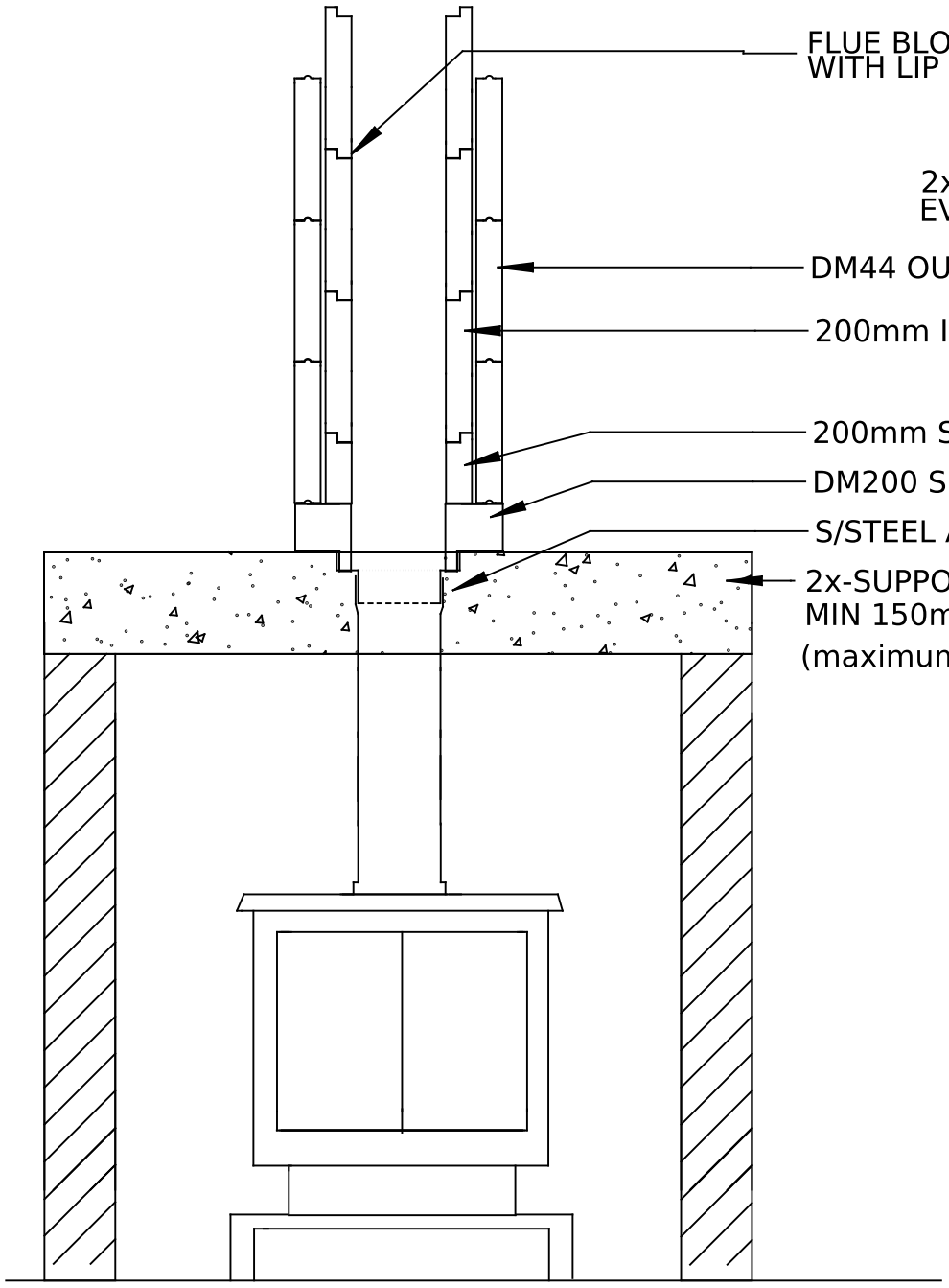

ELEVATIONAL SECTION

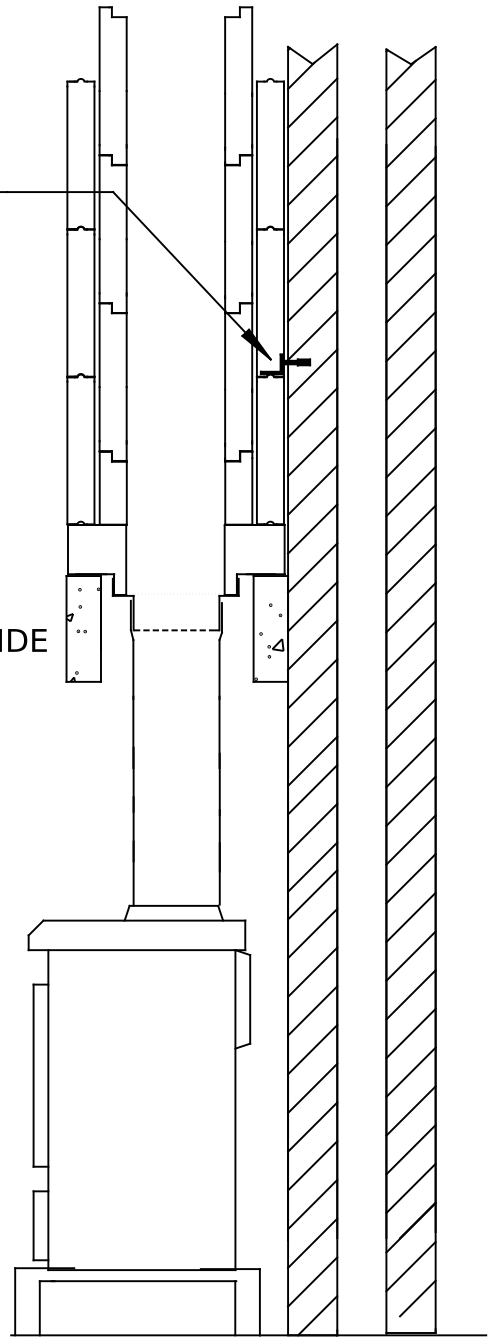

SIDE SECTION

DRAWING TITLE
DM200 SUPPORT BLOCK, CHIMNEY
AND SUPPORT LINTELS FOR
CONNECTING TO AN APPLIANCE

DRAWING NO	DM6b
SCALE	1:20
DATE	29-01-16