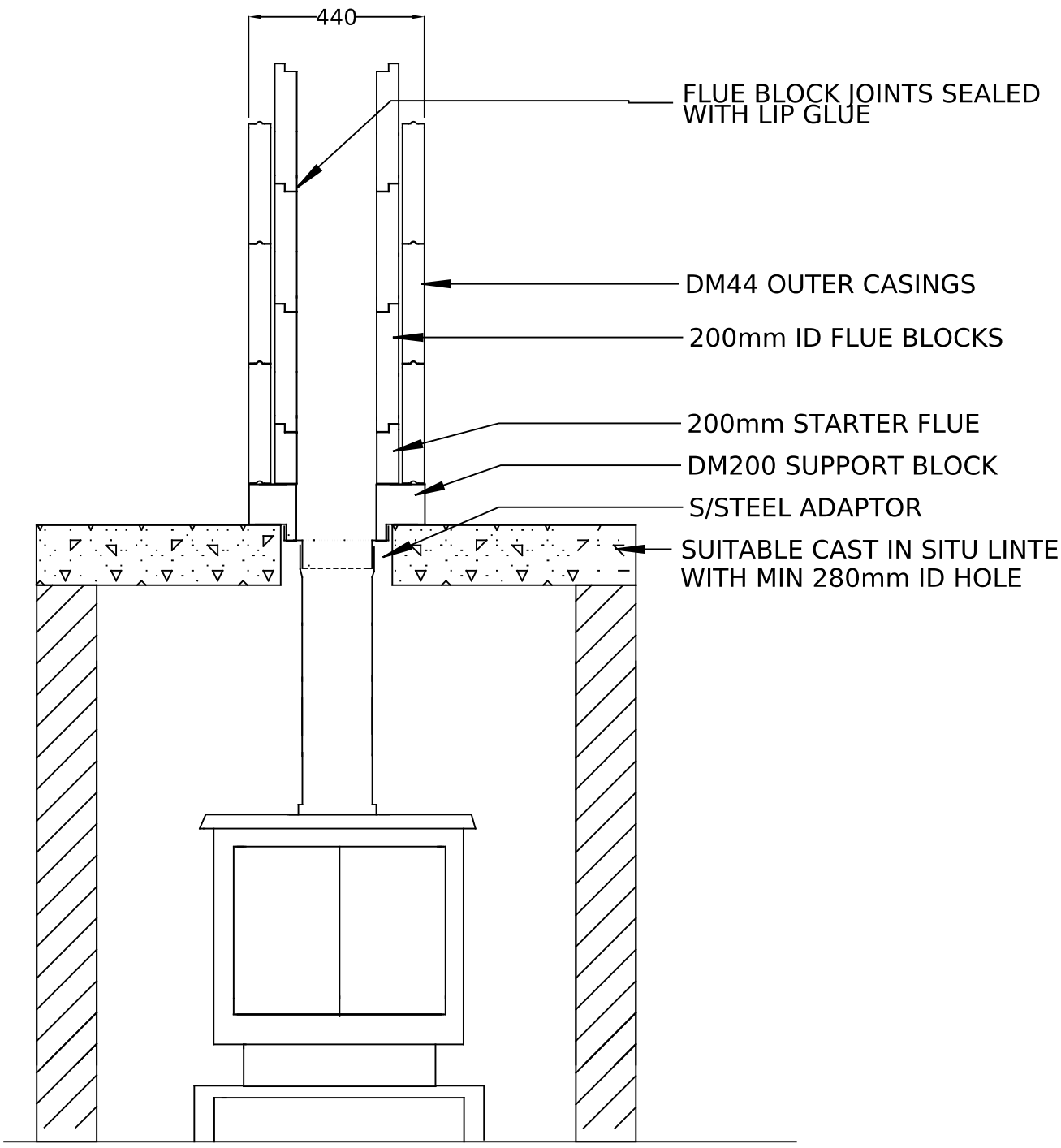

ELEVATIONAL SECTION

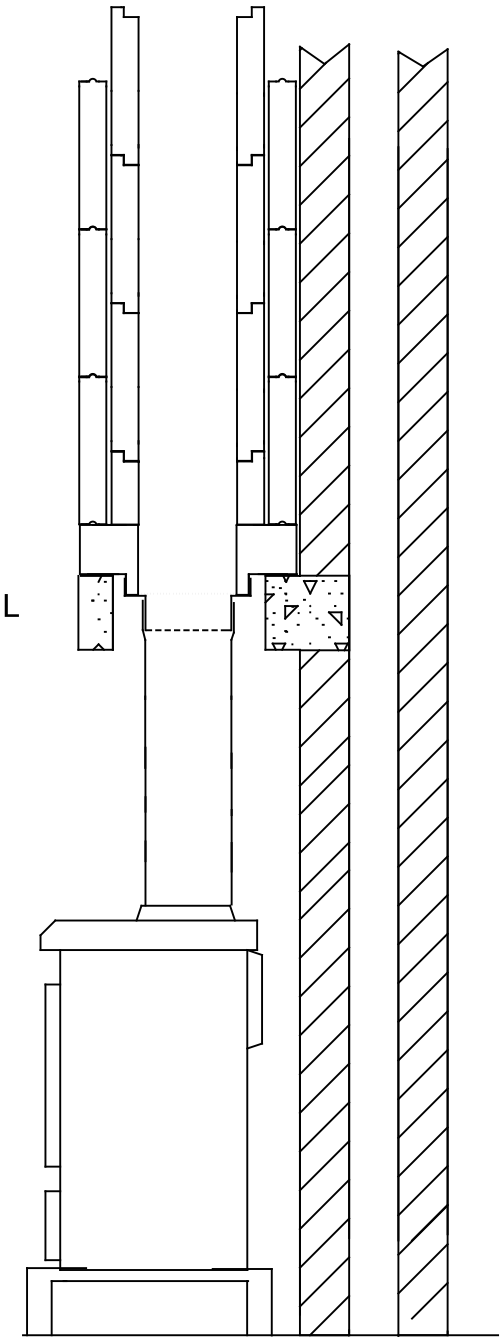

SIDE SECTION

DRAWING TITLE DM200 SUPPORT BLOCK AND DM CHIMNEY ABOVE A CAST IN SITU SLAB LINTEL CONNECTING TO AN APPLIANCE	
DRAWING NO	DM6-b2
SCALE	1:20
DATE	01-08-14