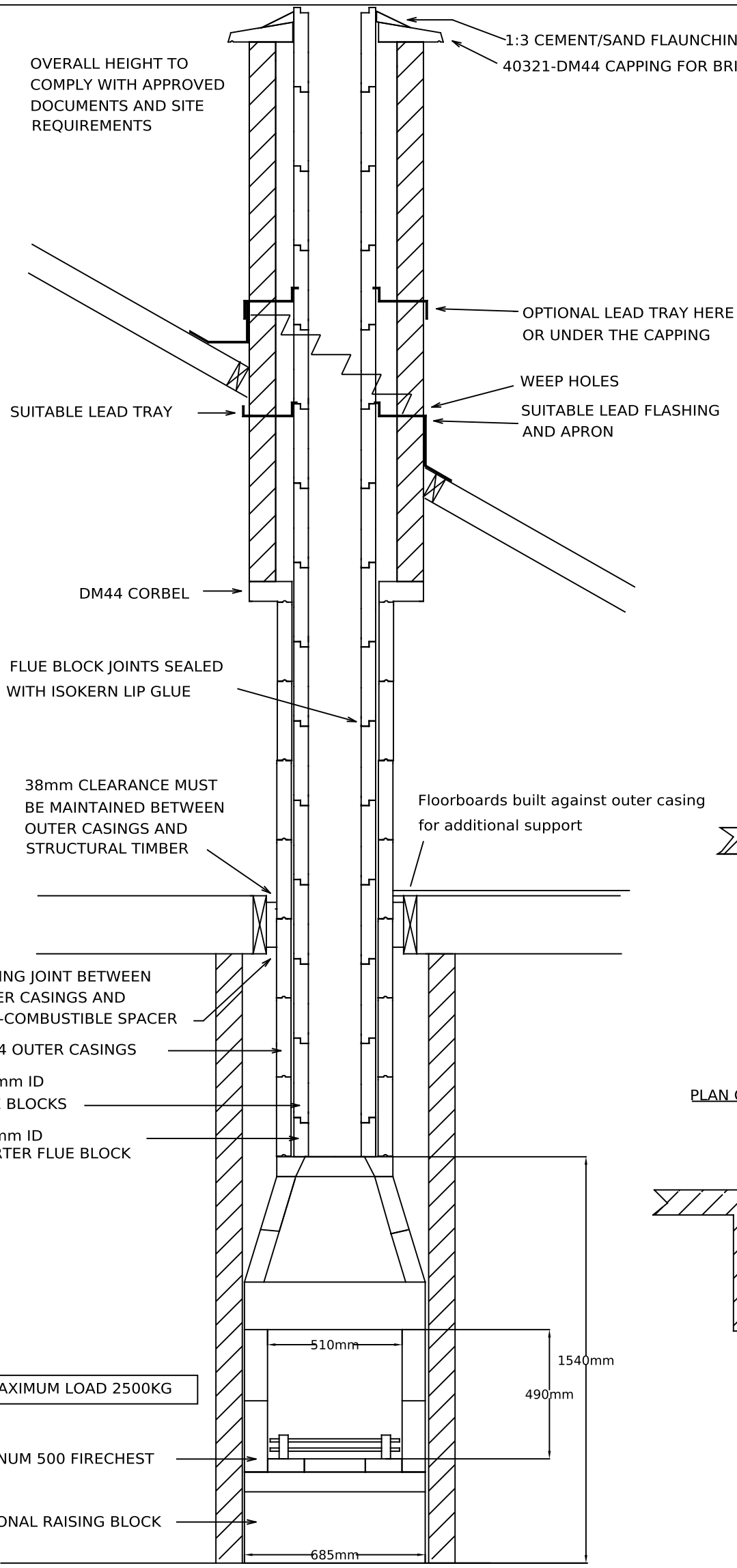

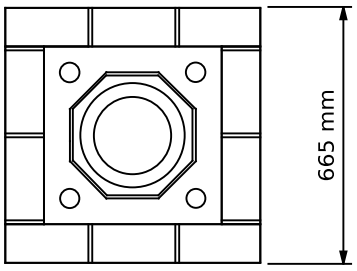

PLAN ABOVE CORBEL

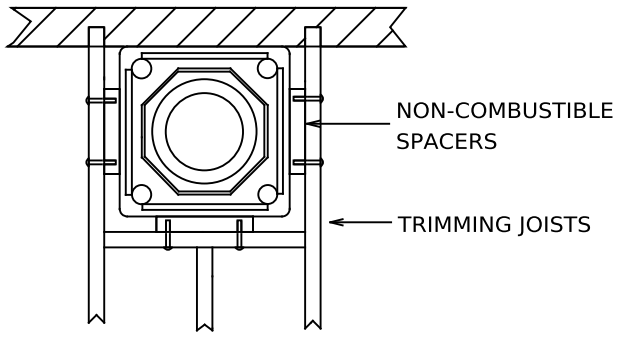

PLAN OF DM CHIMNEY AT CEILING LEVEL

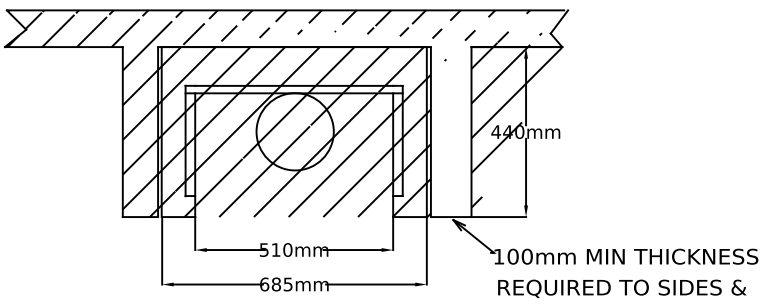

PLAN OF FIRECHEST

DRAWING TITLE ISOKERN MAGNUM 500 & DM CHIMNEY SYSTEM	

DRAWING NO	DM1 MAG 500
SCALE	1:25
DATE	01-08-14