OVERALL HEIGHT TO COMPLY WITH APPROVED DOCUMENTS AND SITE REQUIREMENTS

1:3 CEMENT/SAND FLAUNCHING

DM44 CAPPING FOR BRICKWORK

OPTIONAL LEAD TRAY

WEEP HOLES

SUITABLE LEAD TRAY

SUITABLE LEAD FLASHING AND APRON

DM44 CORBEL

FLUE BLOCK JOINTS SEALED WITH ISOKERN LIP GLUE

38mm CLEARANCE MUST BE MAINTAINED BETWEEN OUTER CASINGS AND STRUCTURAL TIMBER

FLOORBOARDS BUILT AGAINST OUTER CASINGS FOR ADDITIONAL SUPPORT

SLIDING JOINT BETWEEN OUTER CASINGS AND NON-COMBUSTIBLE SPACER

DM44 OUTER CASINGS

200mm ID FLUE BLOCKS

200mm ID STARTER FLUE BLOCK

DM44 GATHER

MAXIMUM LOAD 2500KG

STANDARD PUMICE FIRECHEST

600 mm

660 mm

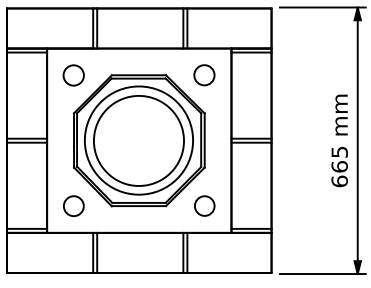

PLAN ABOVE CORBEL

38mm CLEARANCE MUST BE MAINTAINED BETWEEN OUTER CASINGS AND STRUCTURAL TIMBER

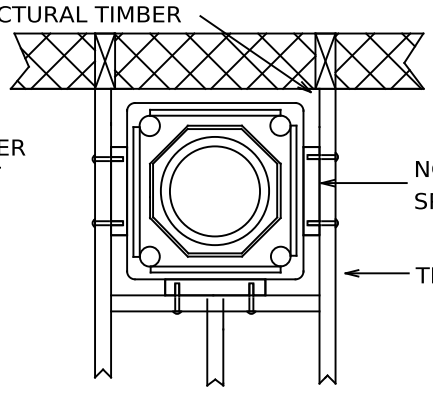

NON-COMBUSTIBLE SPACERS

TRIMMING JOISTS

PLAN OF DM CHIMNEY AT CEILING LEVEL

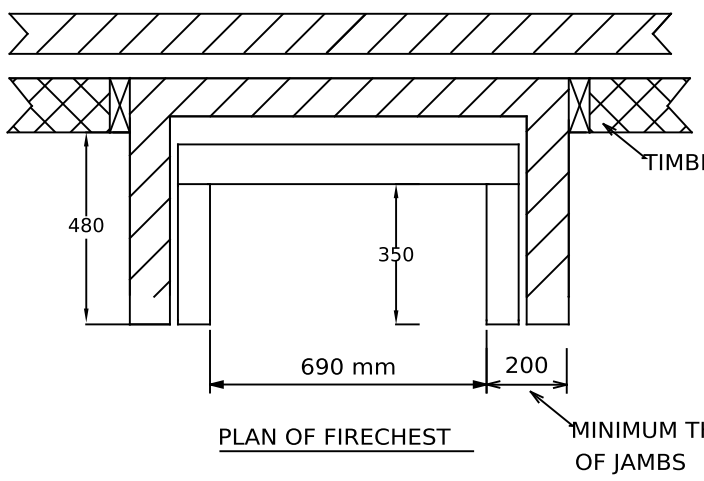

PLAN OF FIRECHEST

MINIMUM THICKNESS OF JAMBS

INSIDE FACE OF FIRECHEST MUST BE LINED WITH A SUITABLE FIREBACK OR FIREBRICK SLIPS

MAXIMUM FINISHED FIREPLACE OPENING SIZE TO BE 590mm WIDE BY 550mm HIGH

DRAWING TITLE

ISOKERN DM CHIMNEY &

DRAWING NO	DM1TF
SCALE	1:25
DATE	01-08-14