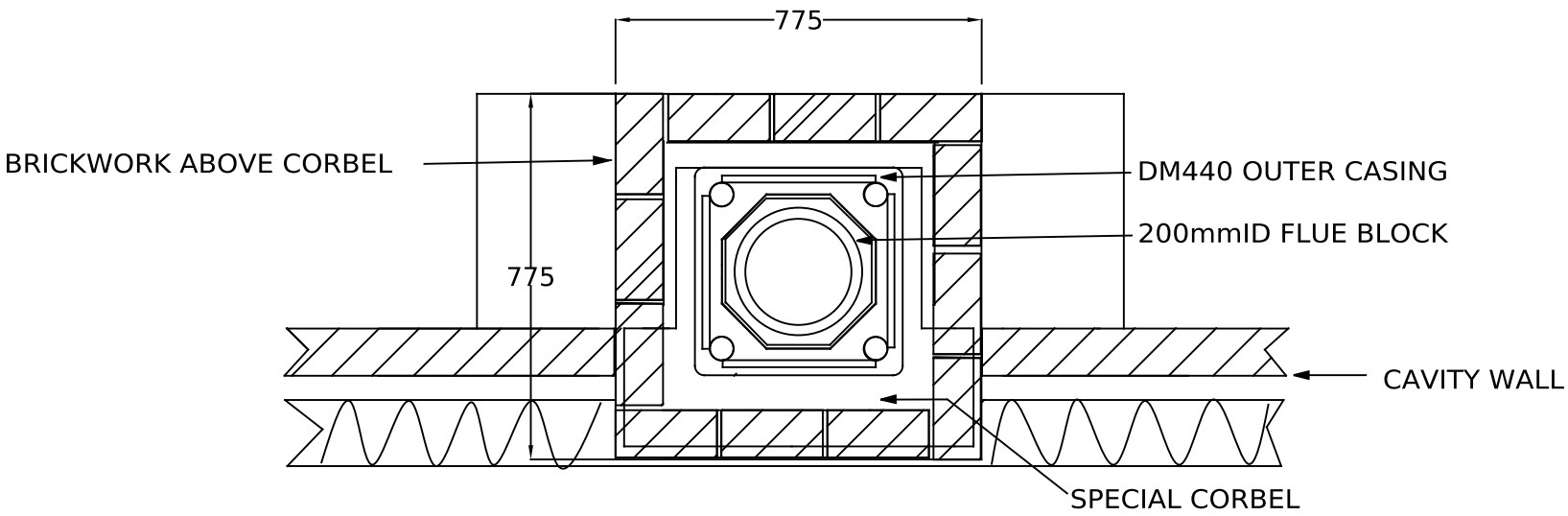

PLAN OF CHIMNEY STACK

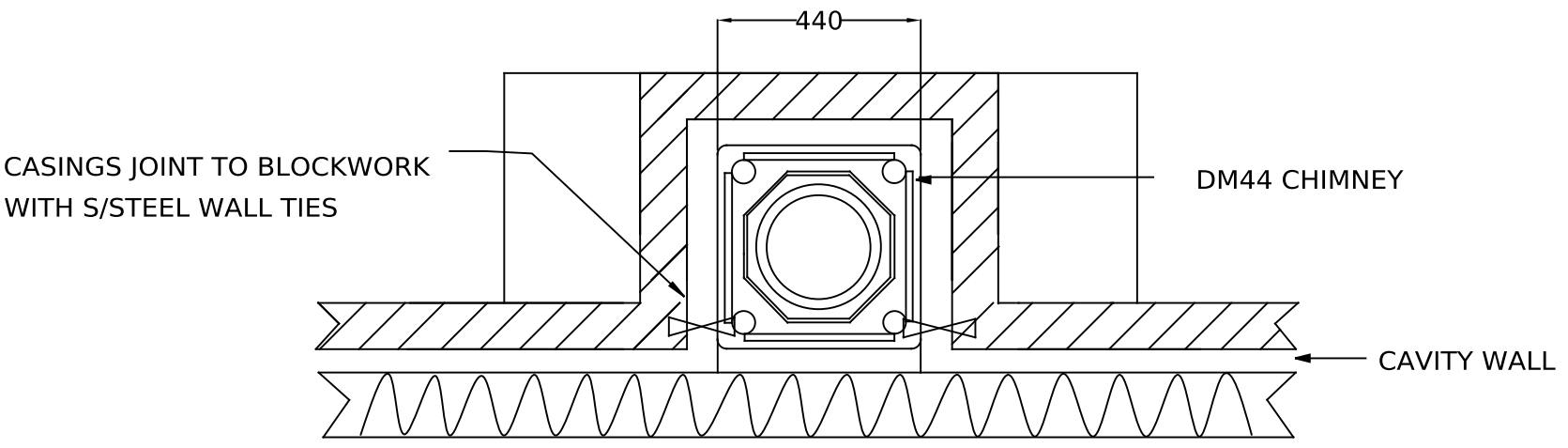

PLAN OF DM44 CHIMNEY

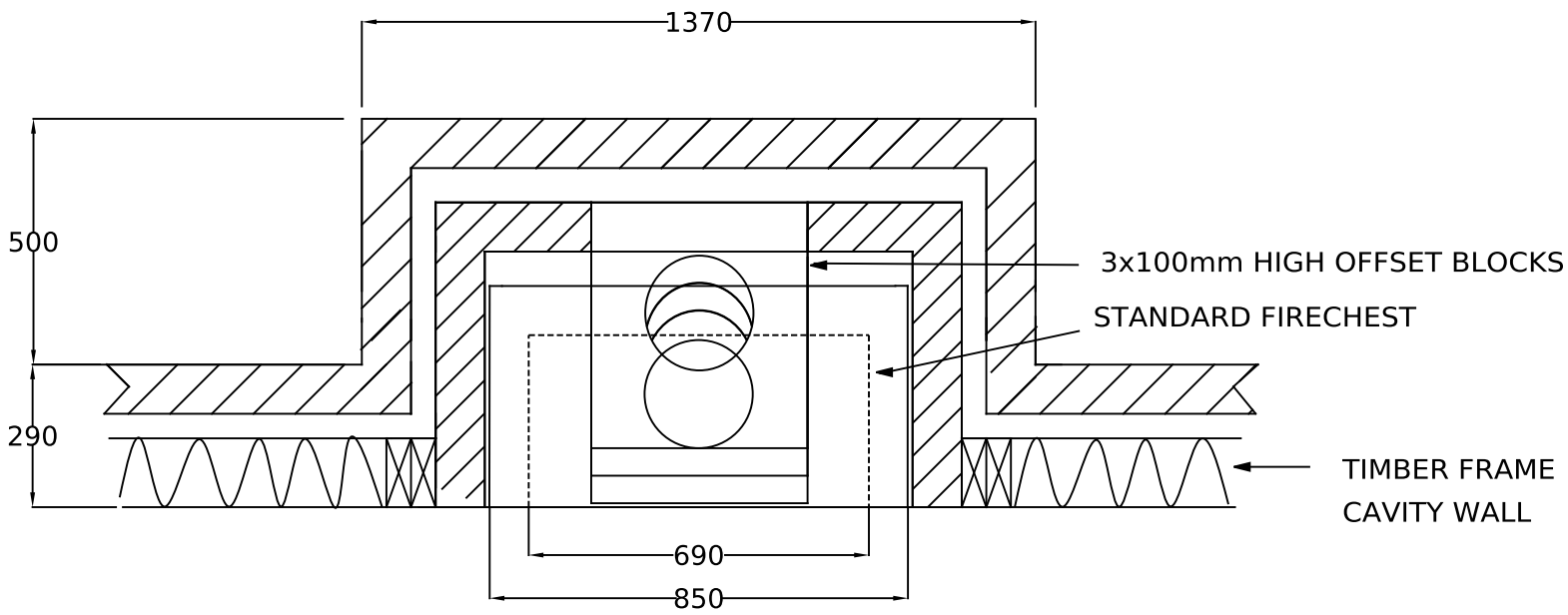

PLAN OF FIRECHEST

INSIDE FACE OF FIRECHEST MUST BE LINED WITH
A SUITABLE FIREBACK OR FIREBRICK SLIPS

MAXIMUM FINISHED FIREPLACE OPENING SIZE
TO BE 590mm WIDE BY 550mm HIGH

CONSTRUCTIONAL HEARTH & FOUNDATIONS
TO COMPLY WITH BUILDING REGULATIONS

DRAWING TITLE

ISOKERN FIRECHEST,DM44 EXTERNAL
CHIMNEY & T CORBEL
FOR TIMBER FRAME CONSTRUCTION

DRAWING NO	DM3c
SCALE	1:20
DATE	01-08-14