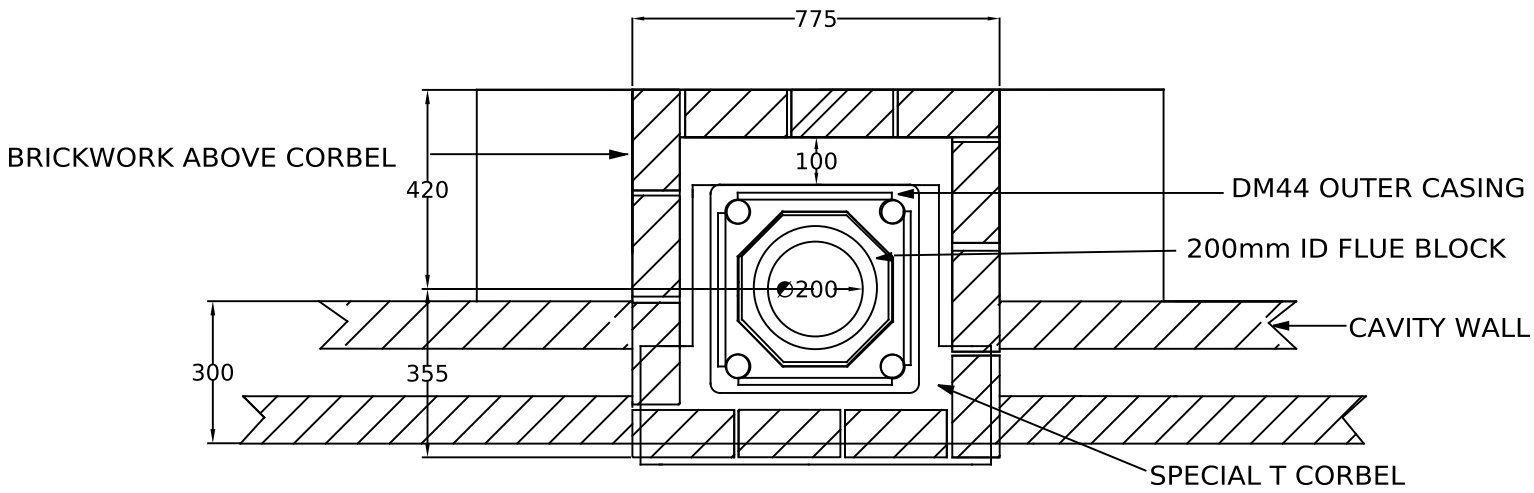

PLAN OF CHIMNEY STACK

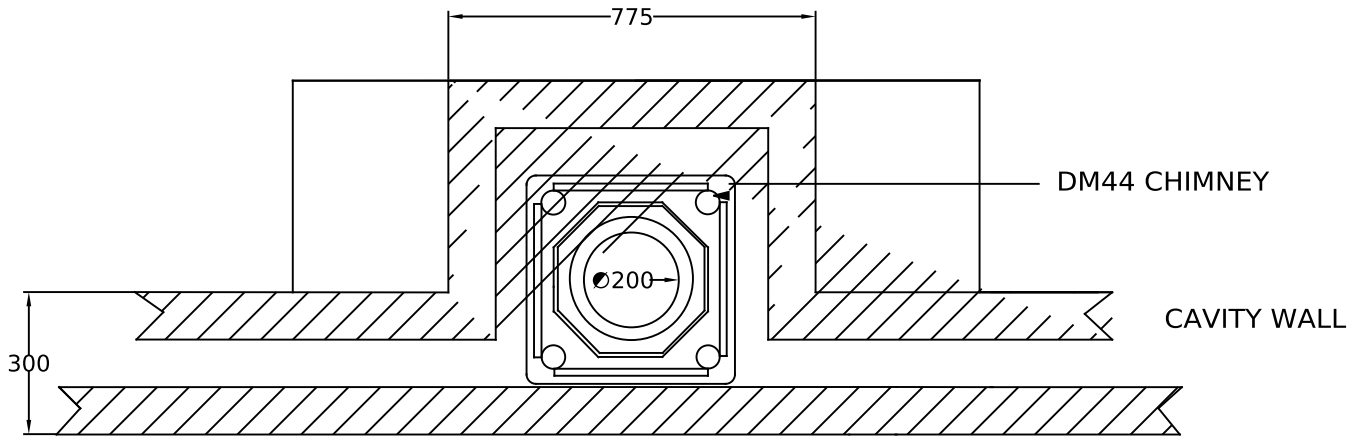

FIRST FLOOR PLAN

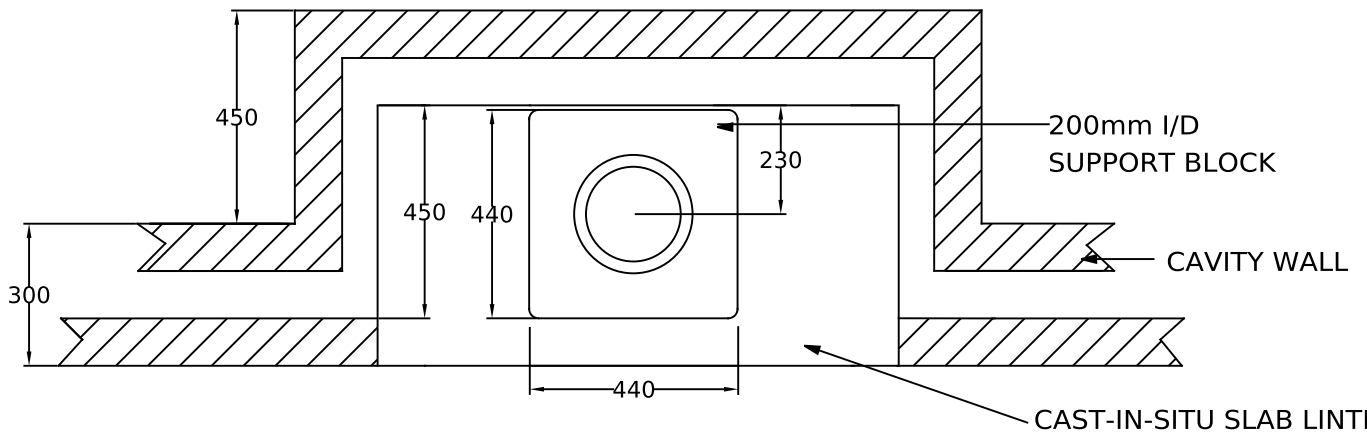

PLAN ABOVE RECESS

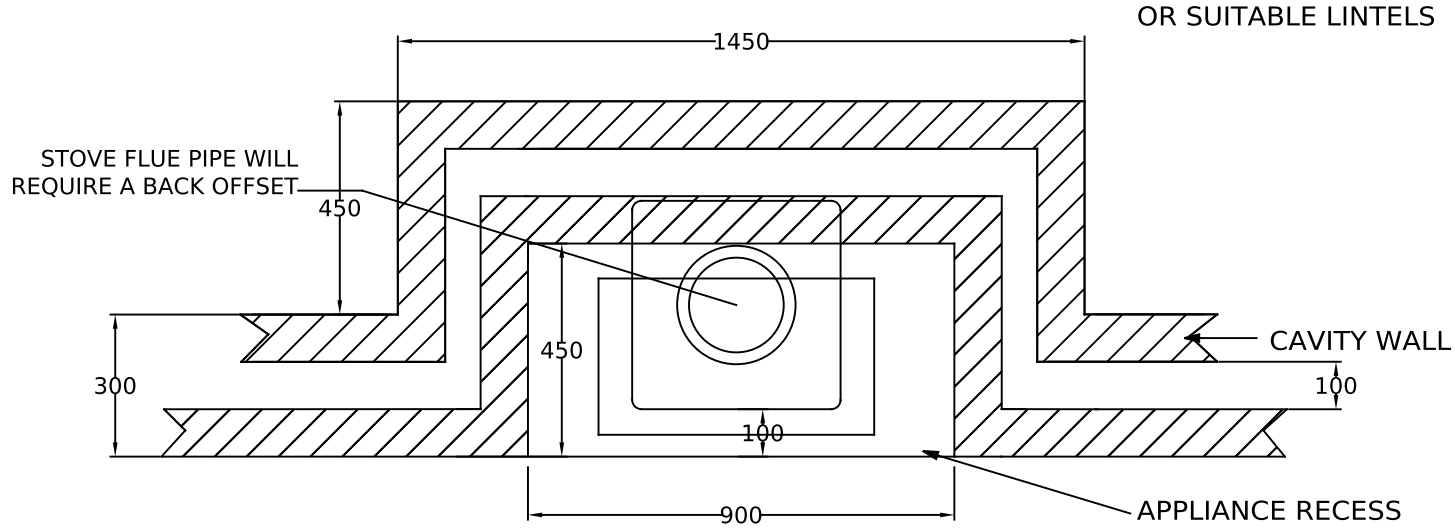

PLAN OF RECESS

CONSTRUCTIONAL HEARTH & FOUNDATIONS
TO COMPLY WITH BUILDING REGULATIONS

SEE DRAWING DM6b FOR GENERAL SECTION DETAIL

DRAWING TITLE ISOKERN DM44 CHIMNEY ABOVE STOVE RECESS WITH T CORBEL TO COMPLETE CHIMNEY STACK	

DRAWING NO	DM3b
SCALE	1:20
DATE	01-08-14