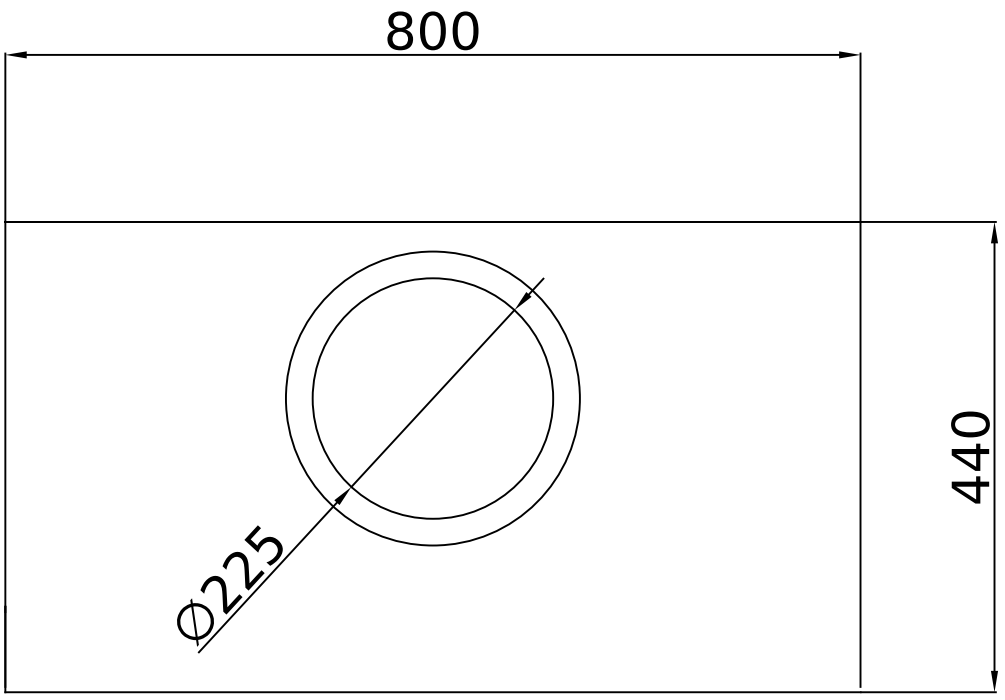

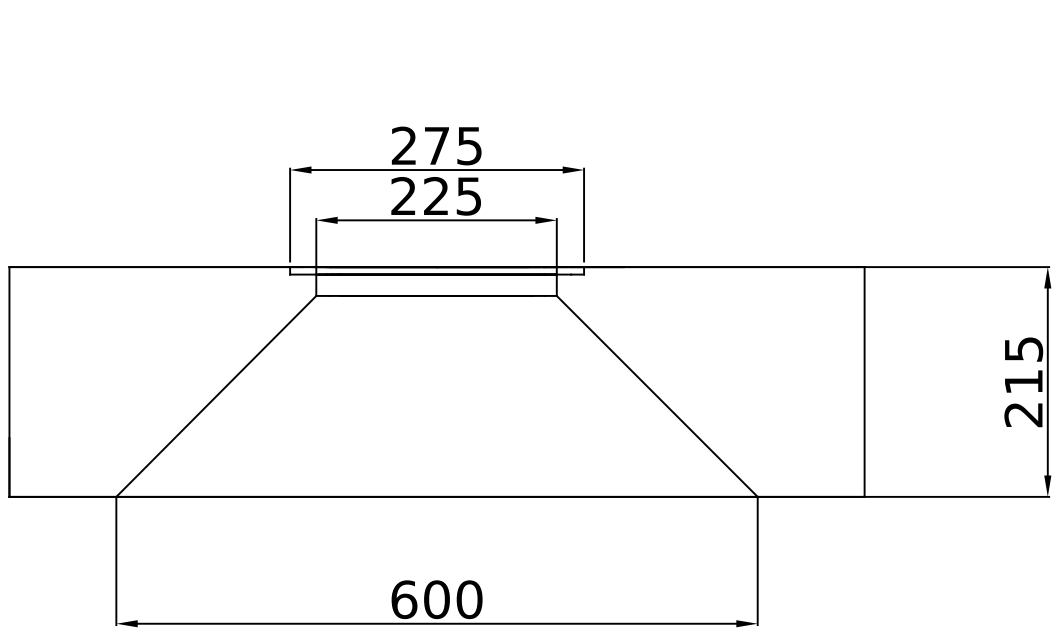

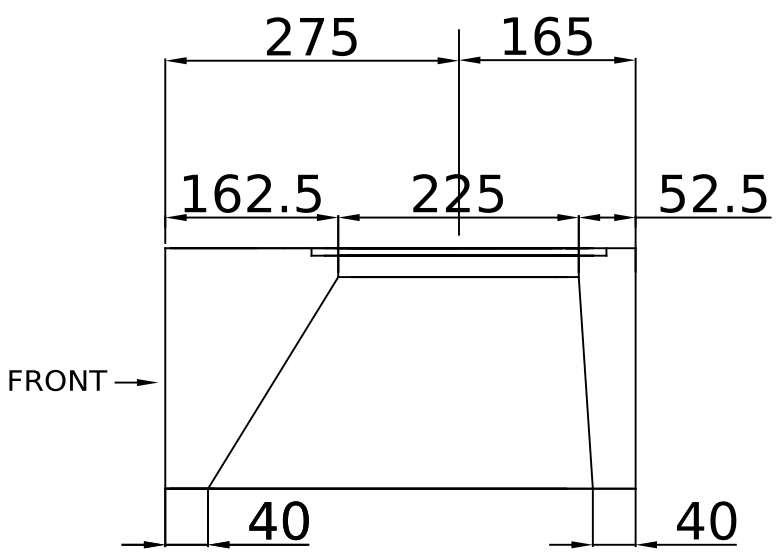

DRAWING TITLE CONCRETE GATHER FOR 225mm I/D LINERS		DRAWING NO: C16 SCALE: 1:10 DATE: 01-08-14