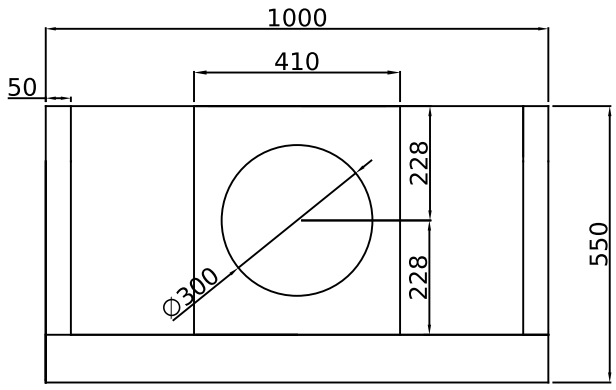

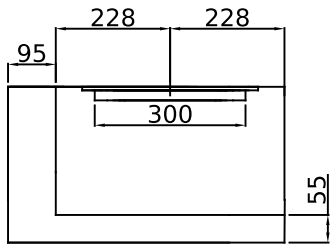

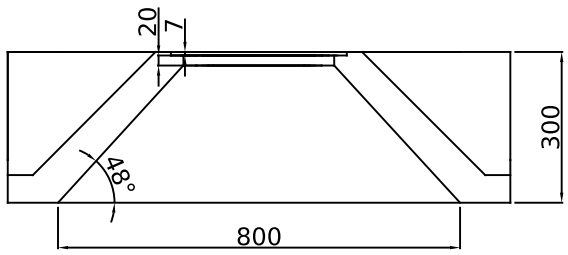

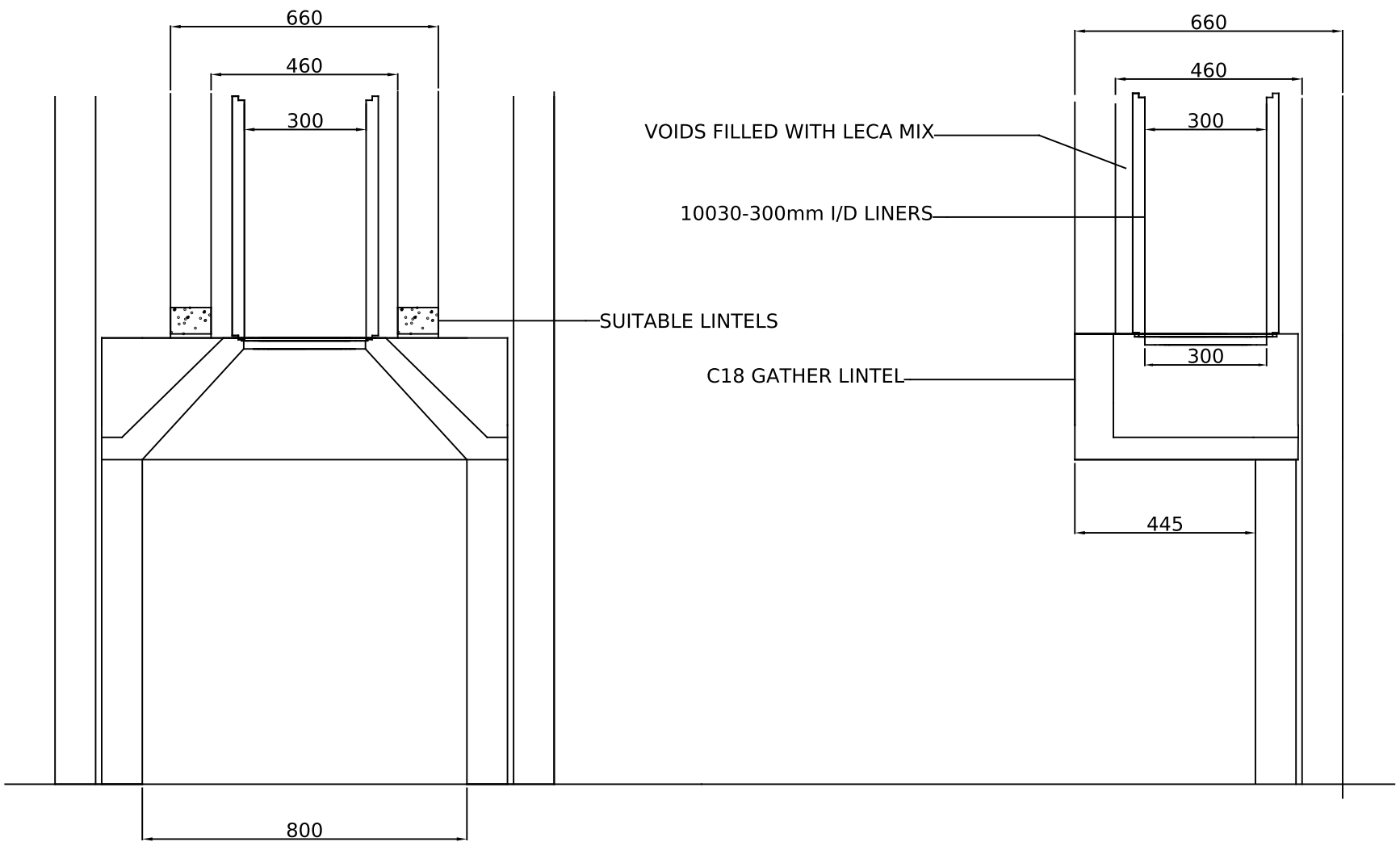

DRAWING TITLE
C18 GATHER LINTEL
WITH 300mm ID LINERS
INSIDE A BRICK/BLOCK CHIMNEY

DRAWING NO	C18 Brick Stack
SCALE	1:20
DATE	01-3-2015

Isokern C18 concrete gather (300mm)

Dimensions in mm. Indicative only, check with us before construction. www.isokernshop.co.uk