

200mm I/D 15DEG BENDS

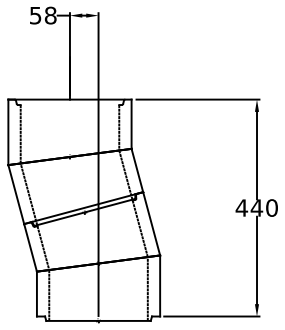

OFFSET DIMENSIONS PER PAIR

OFFSET DISTANCE WITH 1x600mm LENGTH OF LINER BETWEEN =213mm. OVERALL HEIGHT =1020mm

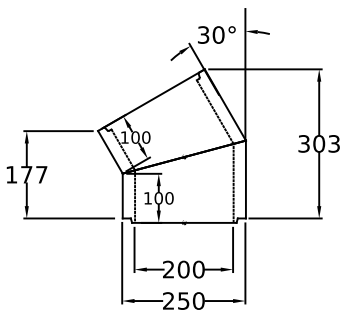

200mm I/D 30DEG BENDS

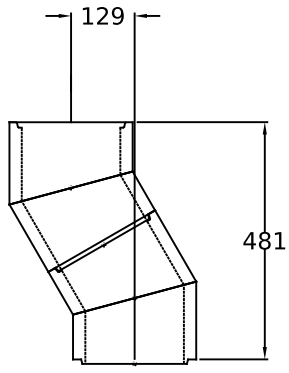

OFFSET DIMENSIONS PER PAIR

OFFSET DISTANCE WITH 1x600mm LENGTH OF LINER BETWEEN =429mm. OVERALL HEIGHT =1001mm

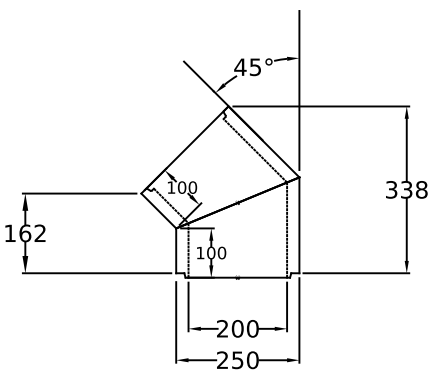

200mm I/D 45DEG BENDS

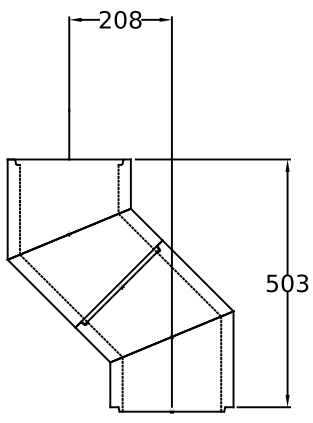

OFFSET DIMENSIONS PER PAIR

OFFSET DISTANCE WITH 1x600mm LENGTH OF LINER BETWEEN =633mm. OVERALL HEIGHT =927mm

DRAWING TITLE ISOKERN BEND CHART 200mm INTERNAL DIAMETER		DRAWING NO: 200 BEND CHART SCALE: 1:20 DATE: 01-08-14

Isokern 200mm bend offset chart

Dimensions in mm. Indicative only, check with us before construction. www.isokernshop.co.uk