

10819-225mm I/D 15DEG BENDS

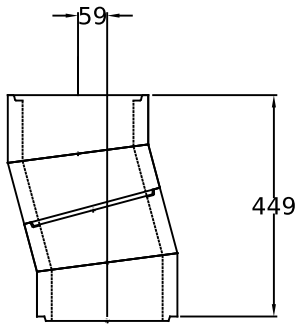

OFFSET DIMENSIONS PER PAIR

OFFSET DISTANCE WITH 1x600mm LENGTH OF LINER BETWEEN =214mm. OVERALL HEIGHT =1029mm

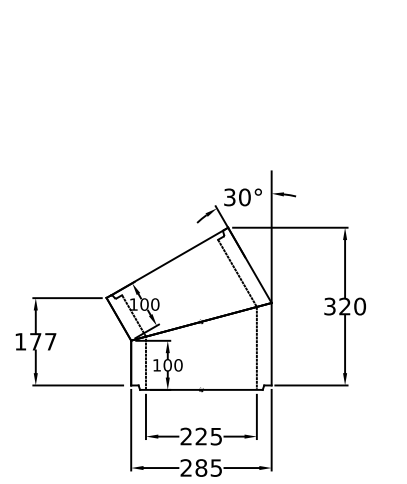

10820-225mm I/D 30DEG BENDS

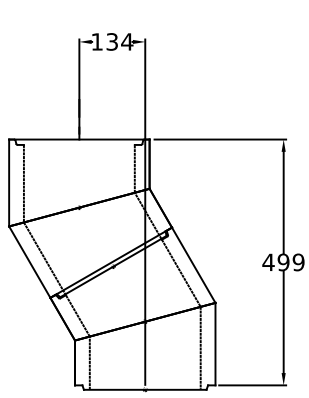

OFFSET DIMENSIONS PER PAIR

OFFSET DISTANCE WITH 1x600mm LENGTH OF LINER BETWEEN =434mm. OVERALL HEIGHT =1019mm

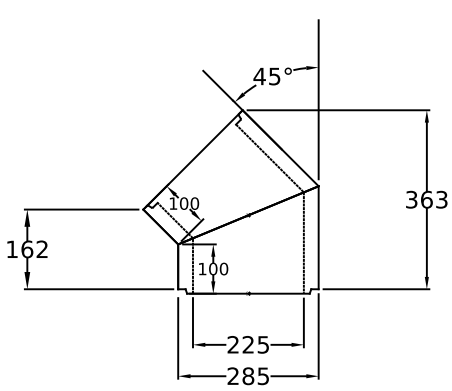

10821-225mm I/D 45DEG BENDS

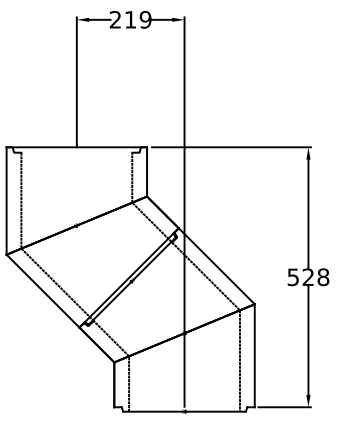

OFFSET DIMENSIONS PER PAIR

OFFSET DISTANCE WITH 1x600mm LENGTH OF LINER BETWEEN =643mm. OVERALL HEIGHT =952mm

DRAWING TITLE

ISOKERN BEND CHART

225mm INTERNAL DIAMETER

14 HAVILAND ROAD
FERNDOWN INDUSTRIAL ESTATE
WIMBORNE, DORSET. BH21 7RF

DRAWING NO	225 BEND CHART
SCALE	1:20
DATE	2-5-2007