


250mm I/D 15DEG BENDS

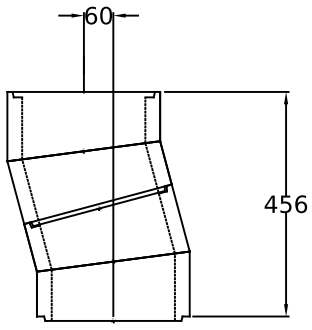


OFFSET DIMENSIONS PER PAIR

OFFSET DISTANCE WITH 1x600mm LENGTH OF LINER BETWEEN =215mm. OVERALL HEIGHT =1035mm

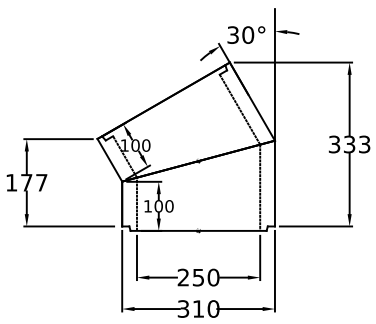


250mm I/D 30DEG BENDS

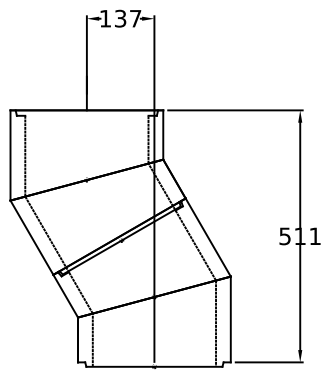


OFFSET DIMENSIONS PER PAIR

OFFSET DISTANCE WITH 1x600mm LENGTH OF LINER BETWEEN =437mm. OVERALL HEIGHT =1031mm

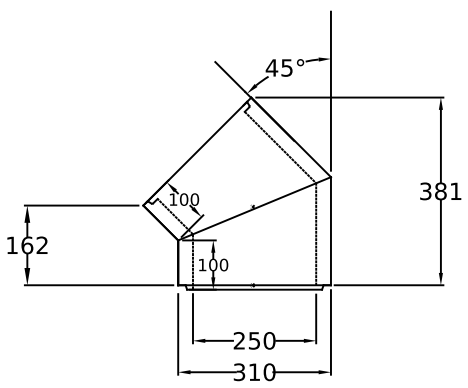


250mm I/D 45DEG BENDS

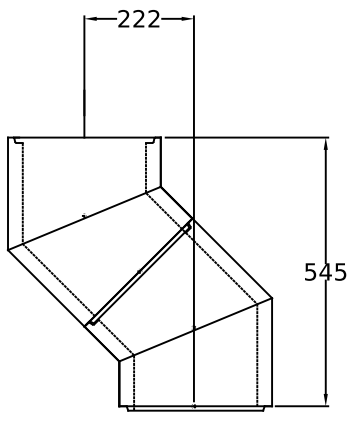


OFFSET DIMENSIONS PER PAIR

OFFSET DISTANCE WITH 1x600mm LENGTH OF LINER BETWEEN =646mm. OVERALL HEIGHT =970mm

DRAWING TITLE

ISOKERN BEND CHART

250mm INTERNAL DIAMETER

| | |
|---|---|
| DRAWING NO | 250 BEND CHART |
| SCALE | 1:20 |
| | |
| DATE | 01-08-14 |