

10828-350mm I/D 15DEG BENDS

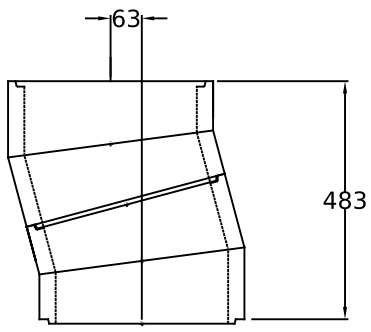

OFFSET DIMENSIONS PER PAIR

OFFSET DISTANCE WITH 1x600mm LENGTH OF LINER BETWEEN =216mm. OVERALL HEIGHT =1053mm

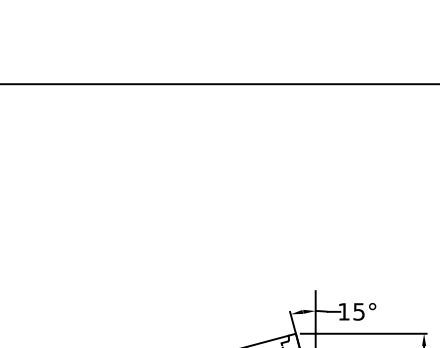

10829-350mm I/D 30DEG BENDS

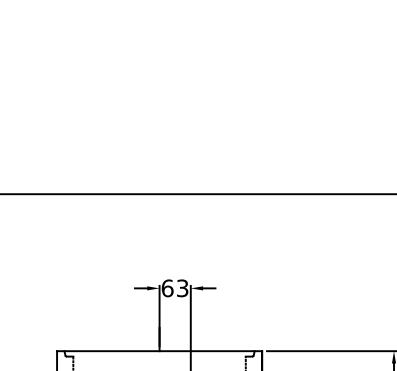

OFFSET DIMENSIONS PER PAIR

OFFSET DISTANCE WITH 1x600mm LENGTH OF LINER BETWEEN =446mm. OVERALL HEIGHT =1075mm

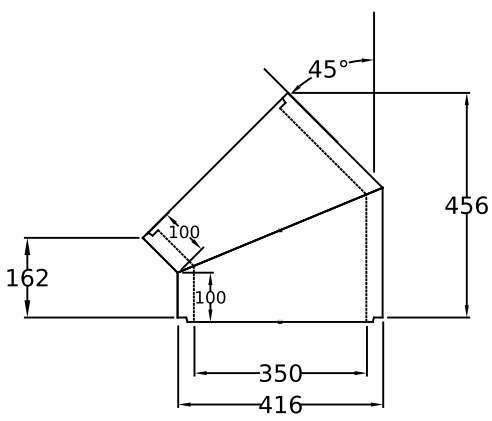

10830-350mm I/D 45DEG BENDS

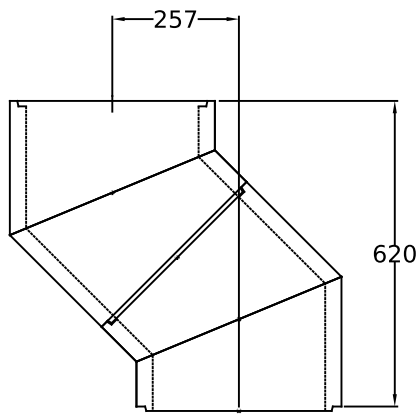

OFFSET DIMENSIONS PER PAIR

OFFSET DISTANCE WITH 1x600mm LENGTH OF LINER BETWEEN =674mm. OVERALL HEIGHT =1037mm

DRAWING TITLE

ISOKERN BEND CHART

350mm INTERNAL DIAMETER

14 HAVILAND ROAD
FERNDOWN INDUSTRIAL ESTATE
WIMBORNE, DORSET. BH21 7RF

DRAWING NO	350 BEND CHART
SCALE	1:20
DATE	26-4-2007