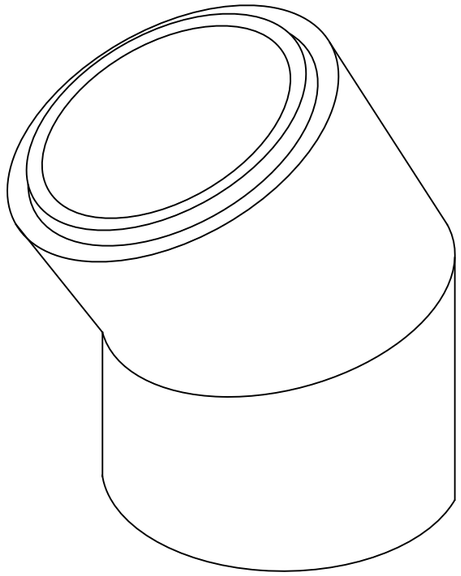

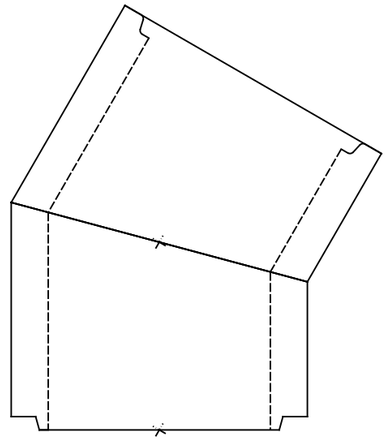

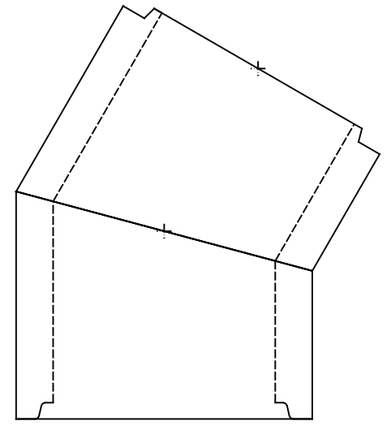

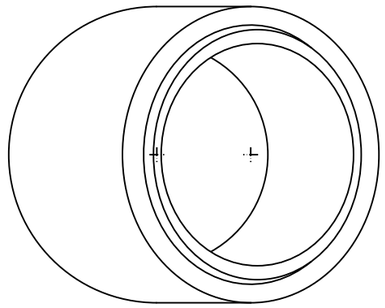

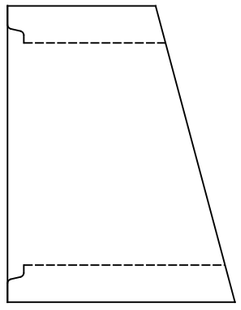

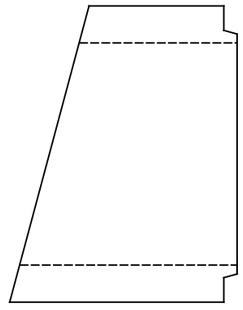

Isokern 150mm 30 degree Bend (126365)

Dimensions in mm. Indicative only, check with us before construction. www.isokernshop.co.uk