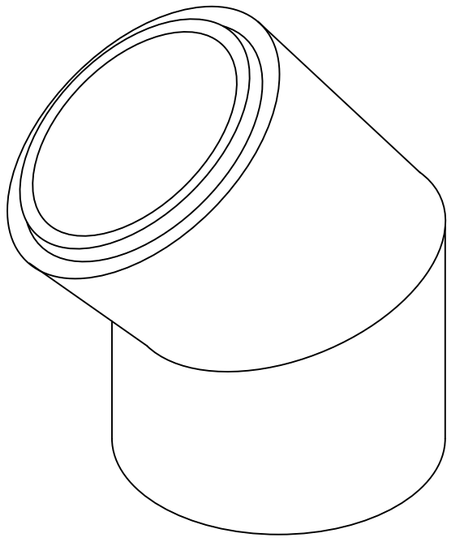

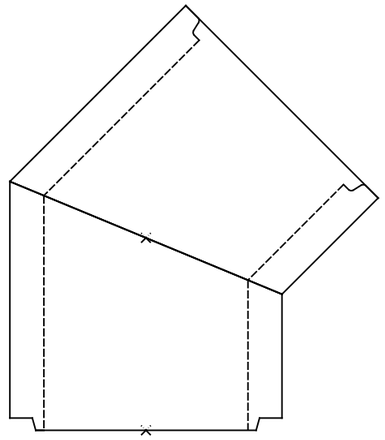

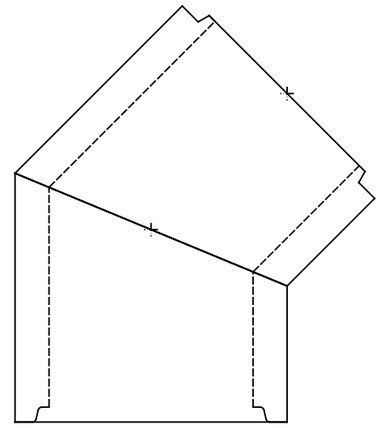

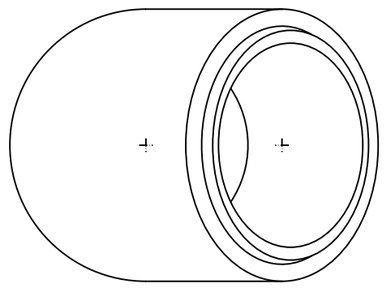

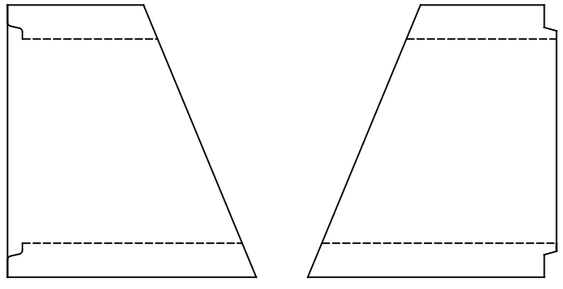

Isokern 150mm 45 degree Bend (126367)

Dimensions in mm. Indicative only, check with us before construction. www.isokernshop.co.uk