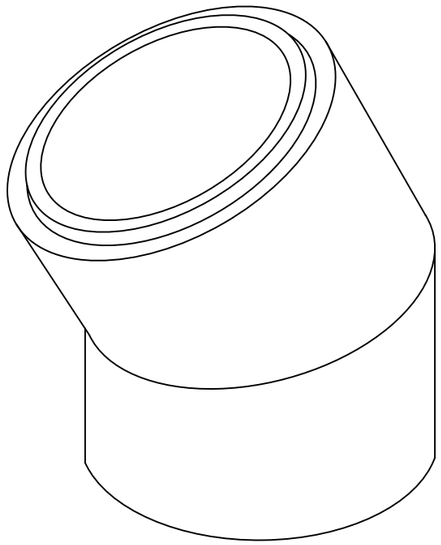

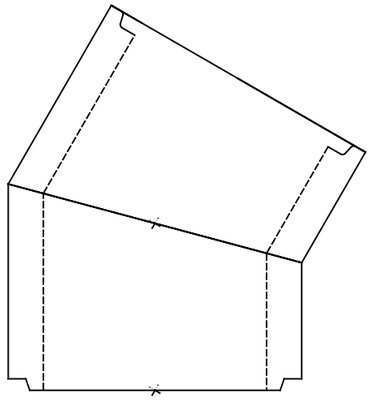

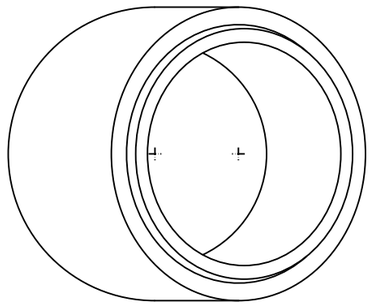

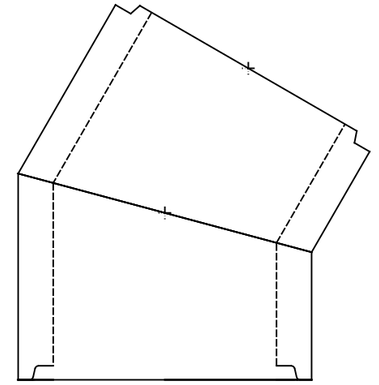

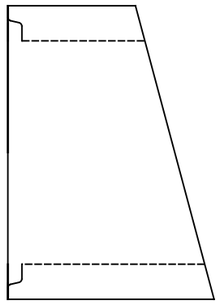

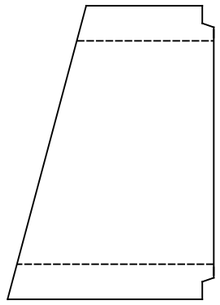

Isokern 175mm 30 degree Bend (126496)

Dimensions in mm. Indicative only, check with us before construction. www.isokernshop.co.uk