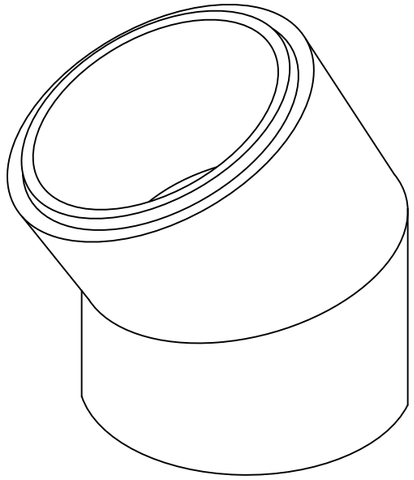

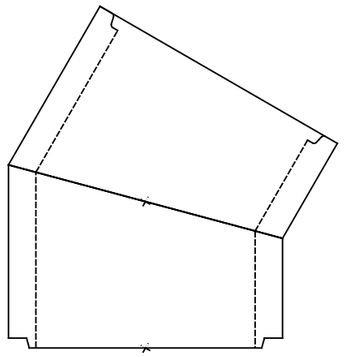

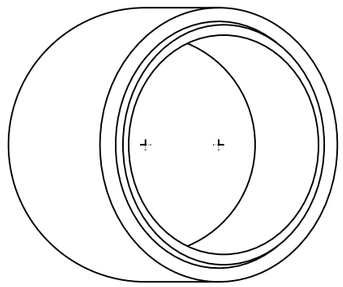

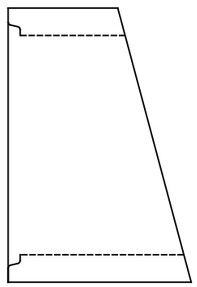

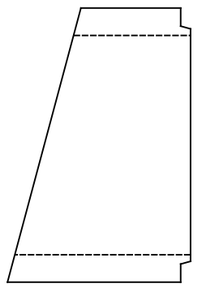

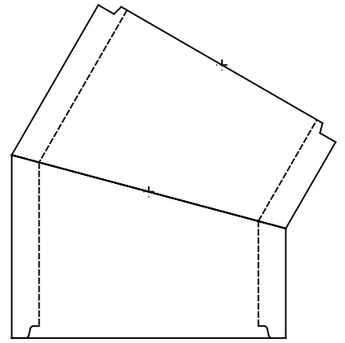

**Isokern 200mm 30 degree bend (127680)**

Dimensions in mm. Indicative only, check with us before construction.  www.isokernshop.co.uk