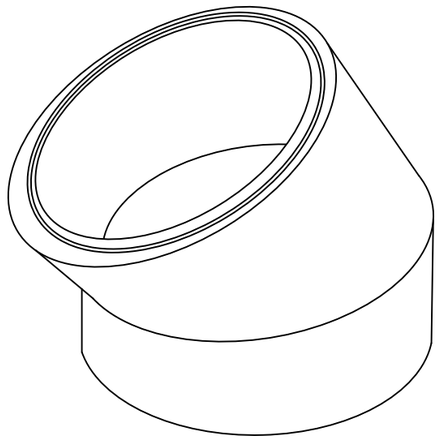

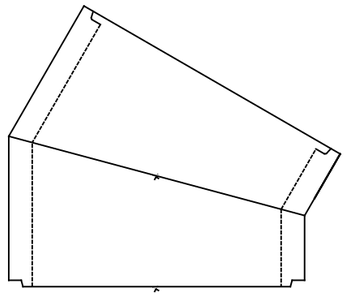

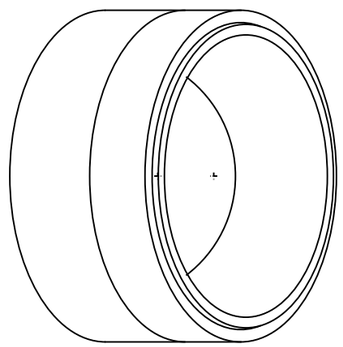

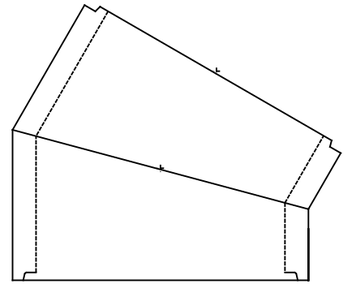

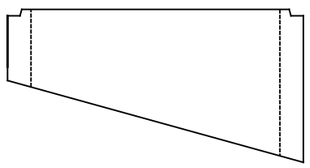

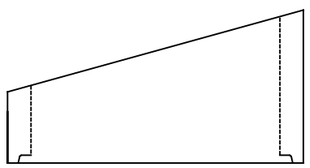

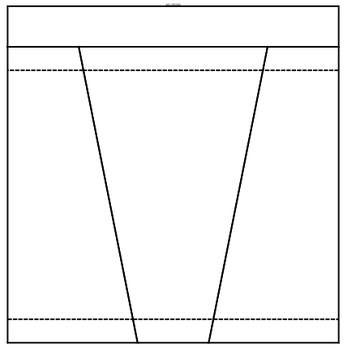

Isokern 350mm 30 degree Bend (129355)

Dimensions in mm. Indicative only, check with us before construction. www.isokernshop.co.uk