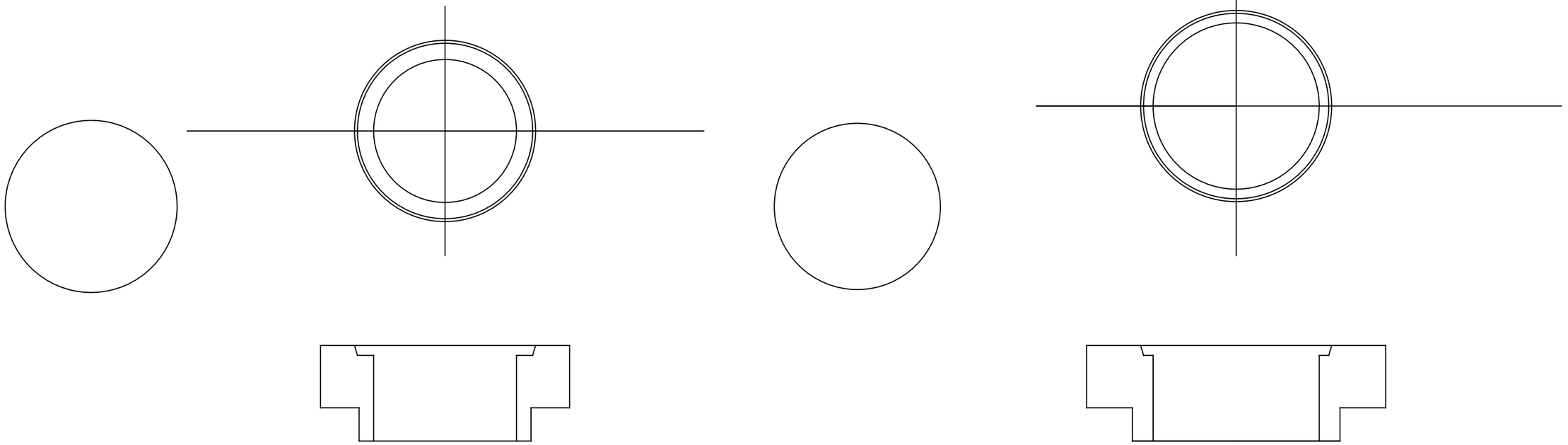

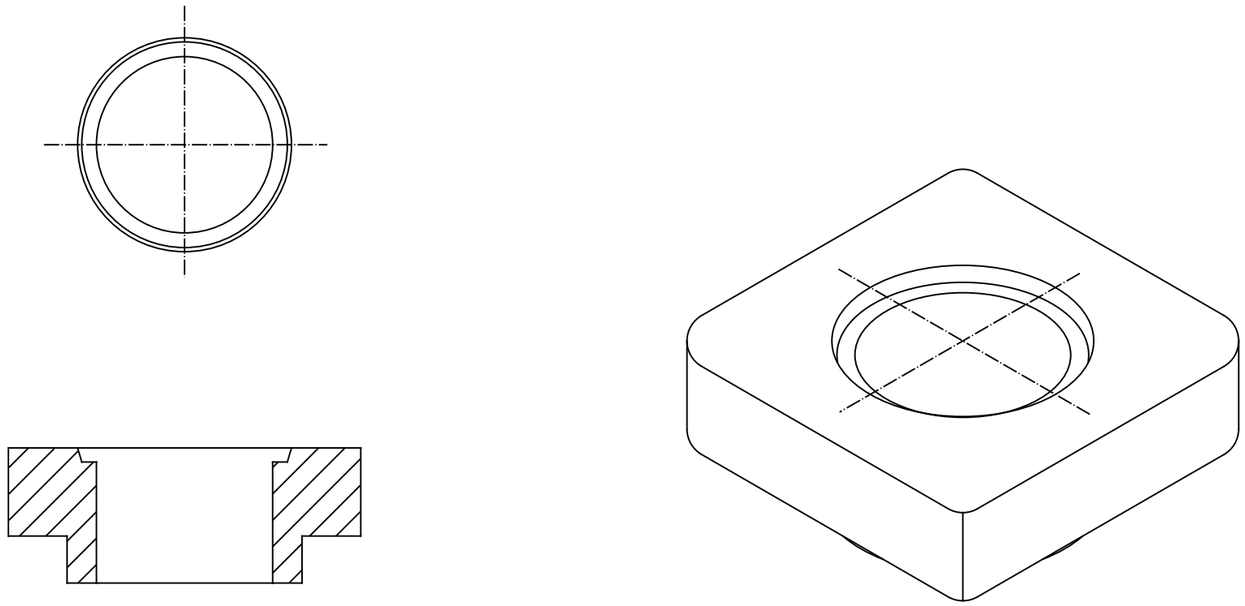

**Isokern 150mm Support Block (126366)**

Dimensions in mm. Indicative only, check with us before construction.  www.isokernshop.co.uk