

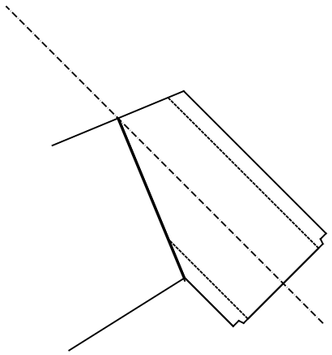

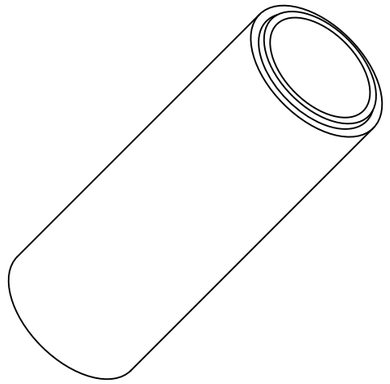

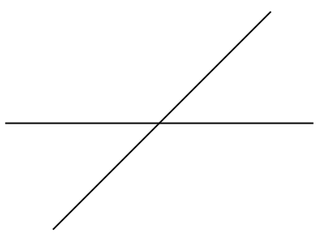

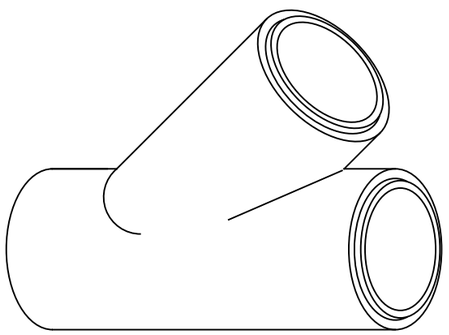

Isokern 175mm 45 degree T Liner (126500)

Dimensions in mm. Indicative only, check with us before construction. www.isokernshop.co.uk