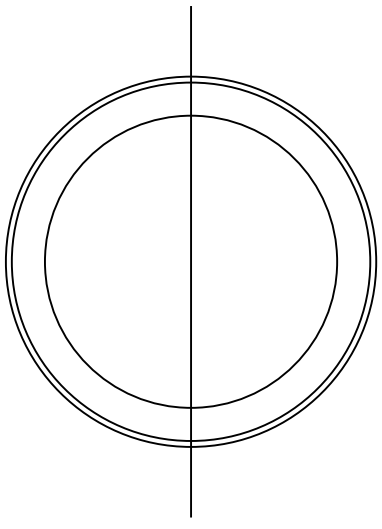



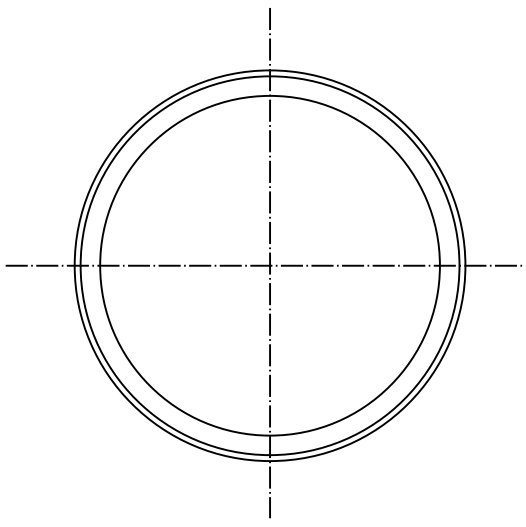

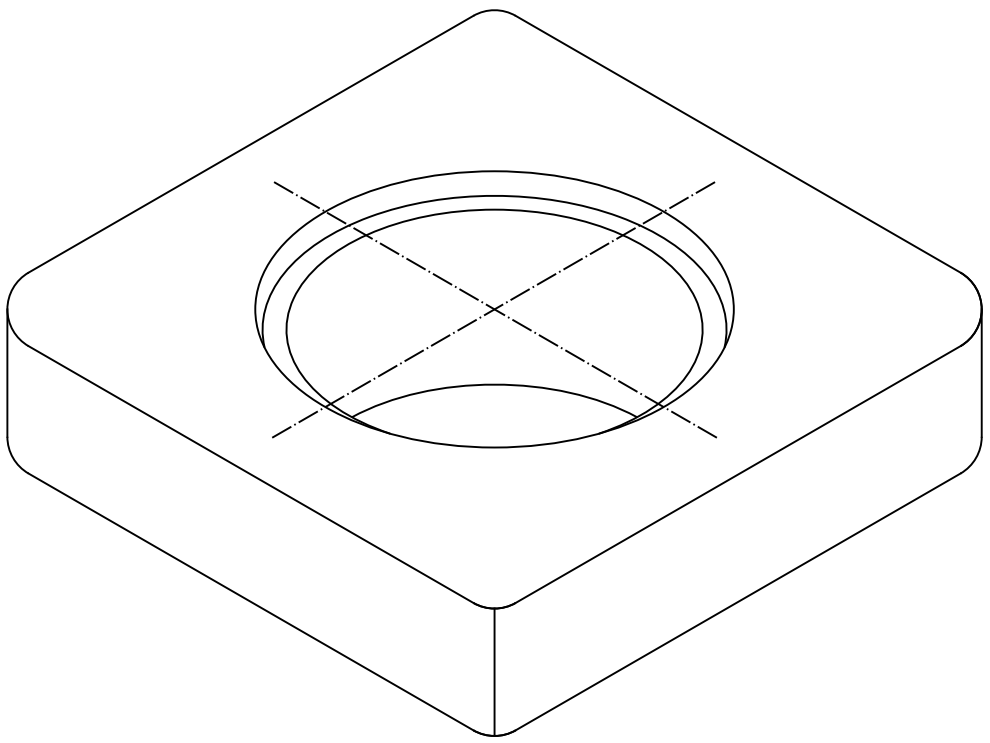



Isokern 200mm Support Block (127340)

Dimensions in mm. Indicative only, check with us before construction. www.isokernshop.co.uk