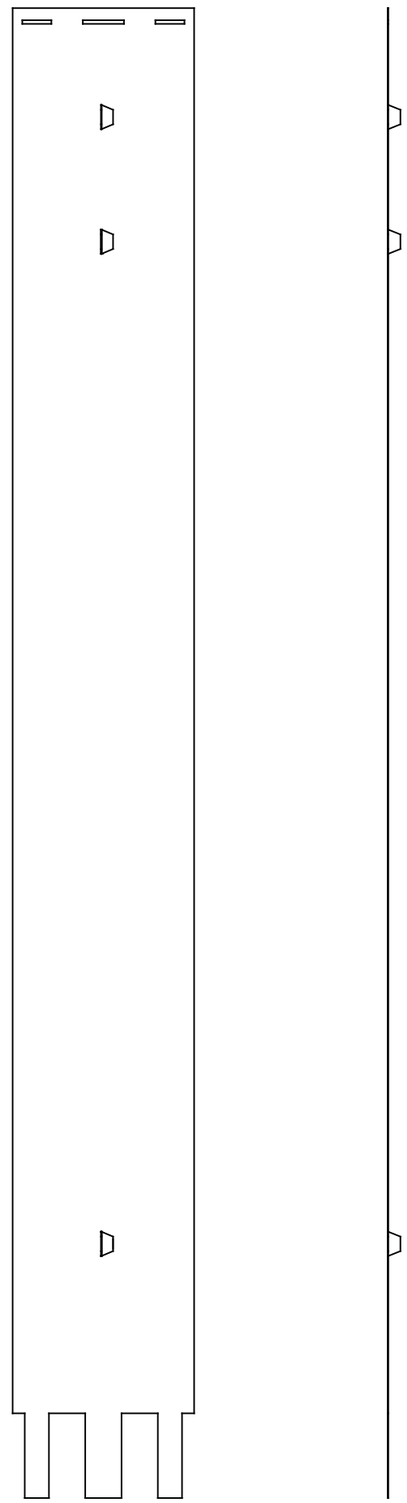

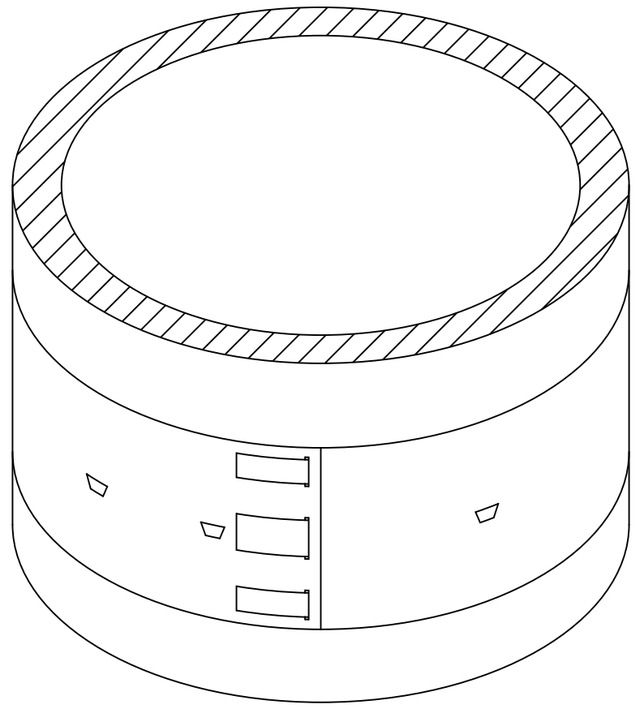

Isokern 350mm Collar (129356)

Dimensions in mm. Indicative only, check with us before construction. www.isokernshop.co.uk