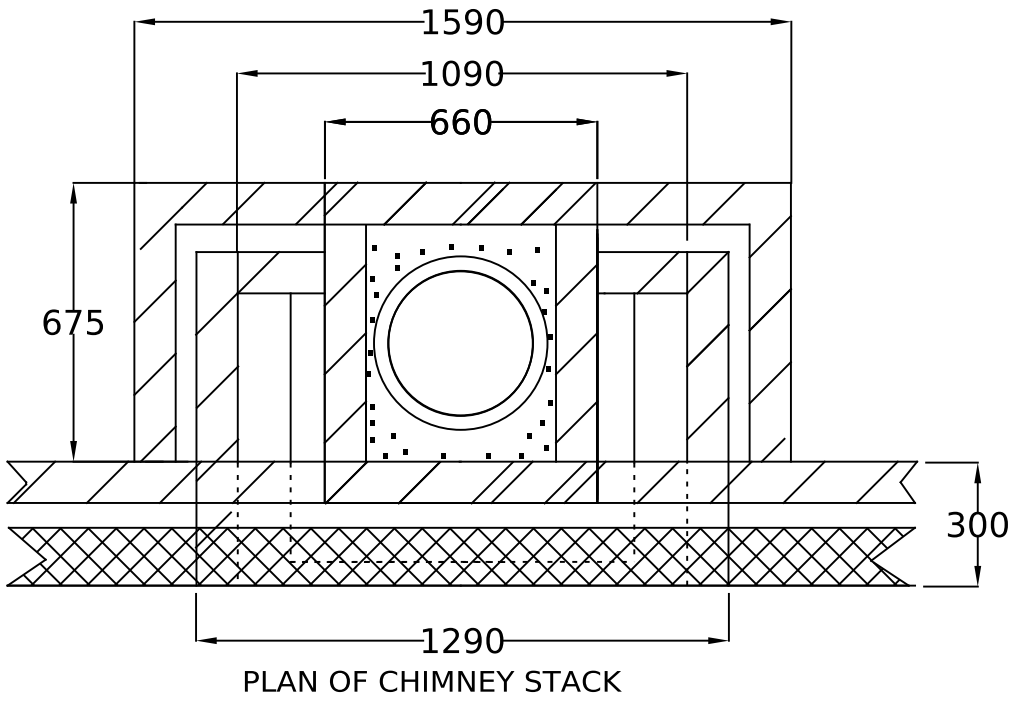

PLAN OF CHIMNEY STACK

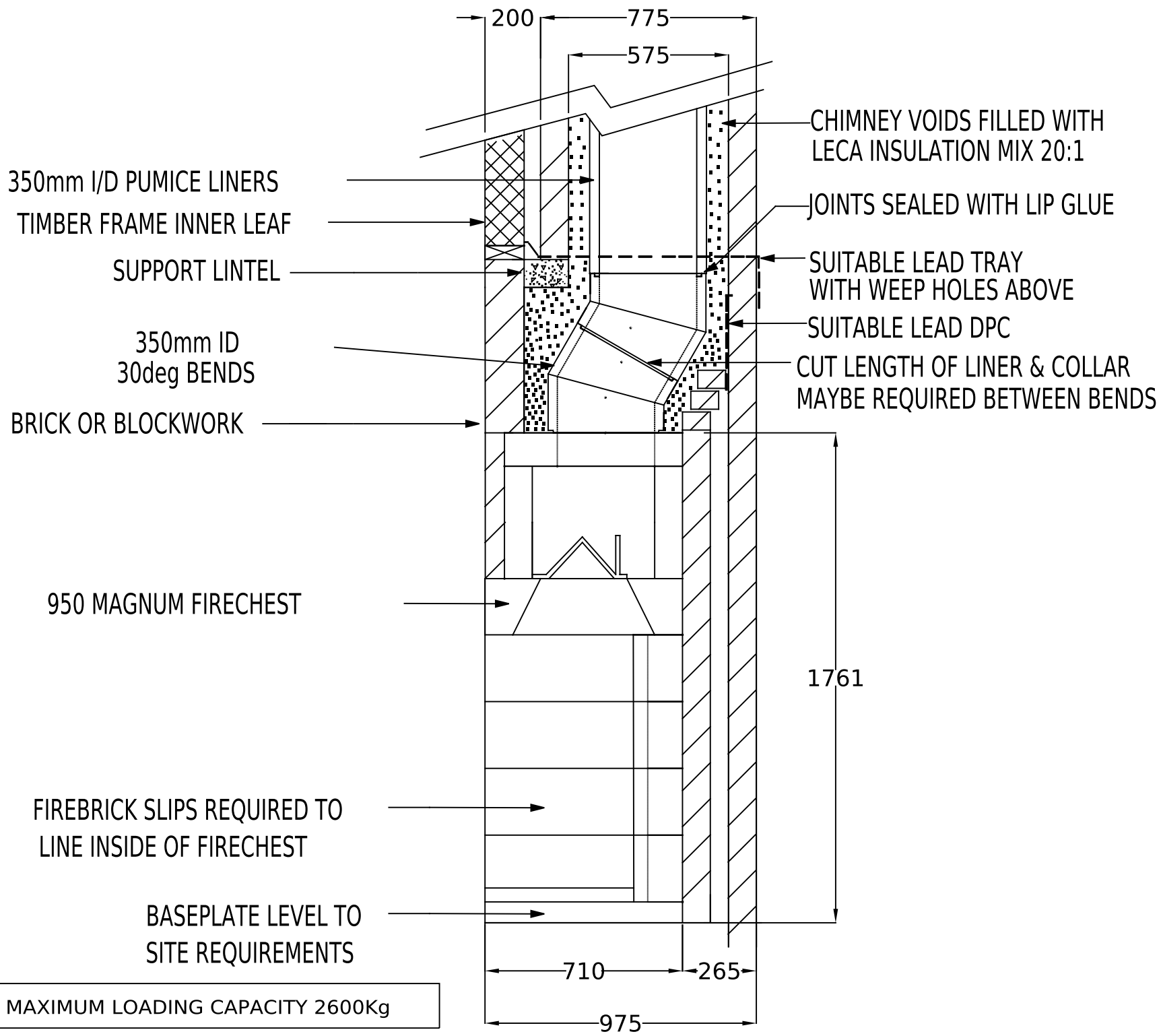

MAXIMUM LOADING CAPACITY 2600Kg

DRAWING TITLE
ISOKERN MAGNUM 950 FIRECHEST
WITH 350mm I/D REBATED LINERS
IN TIMBER FRAME FOR
EXTERNAL BRICK CHIMNEY

DRAWING NO	Std6d TF950 MAG
SCALE	1:25
DATE	01-08-14

Dimensions in mm unless stated otherwise only, check with us before construction. www.isokernshop.co.uk