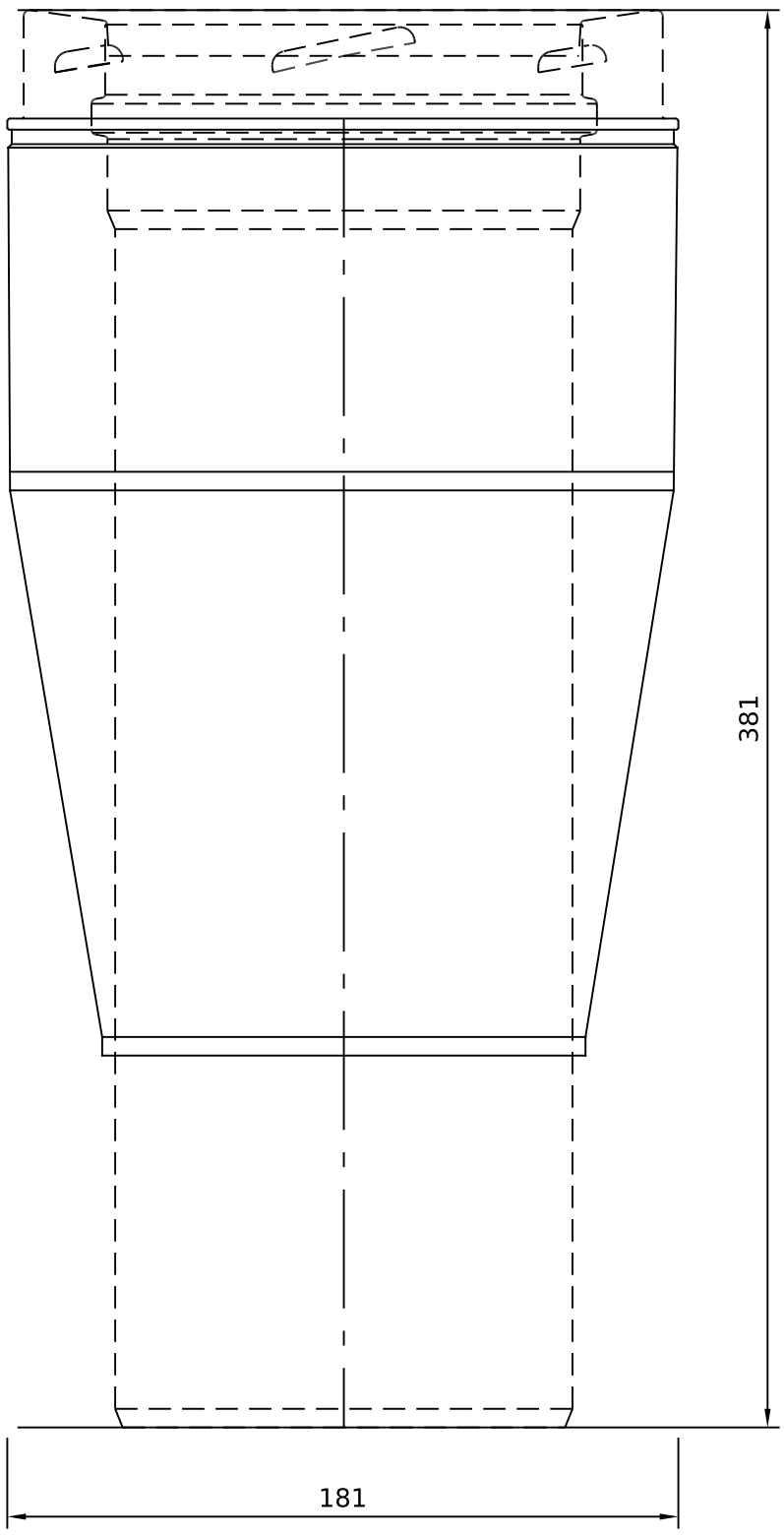

Catalogue dims: A 123, B 352 | overall as drawn 180.5 x 381.15

Part code 125340 | Size 125mm ID / 180mm OD | Finish: Stainless Steel | Scale 1:2 at A3 | Sheet 1 of 1

ICID+ Adjustable Stove Pipe Starter Length (Short), 125mm (5in), Stainless Steel (125340)

Dimensions in mm. Indicative only, check with us before construction. www.isokernshop.co.uk