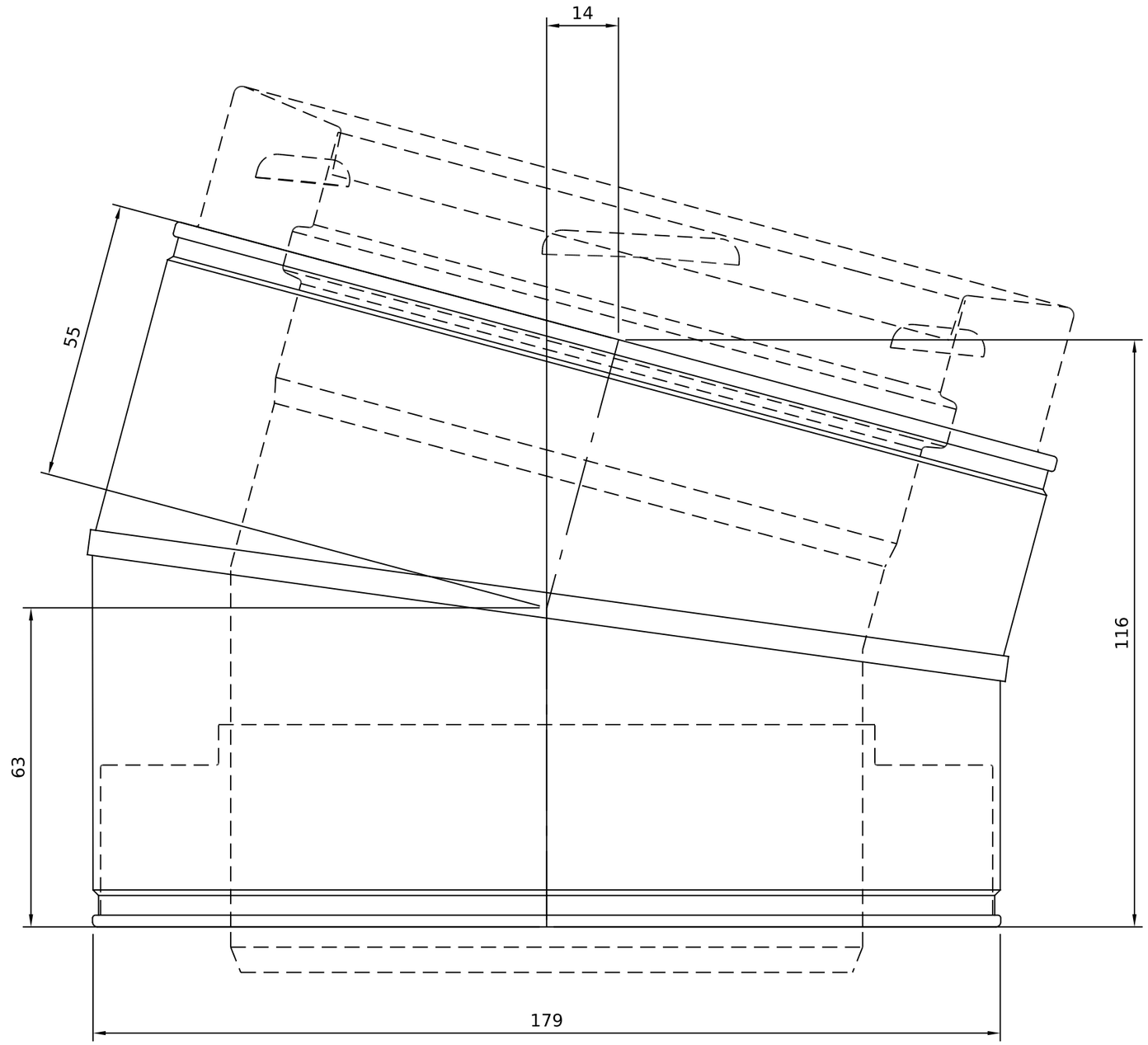

Effective lengths A 63.1 / B 54.86 (catalogue A 63 / B 55); offset 14.2 x 116.1

Part code 125254 | Size 125mm ID / 180mm OD | Finish: Black | Scale 1:1 at A3 | Sheet 1 of 1

ICID+ Twin Wall Flue 15 Degree Bend, 125mm (5in), Black (125254)

Dimensions in mm. Indicative only, check with us before construction. www.isokernshop.co.uk