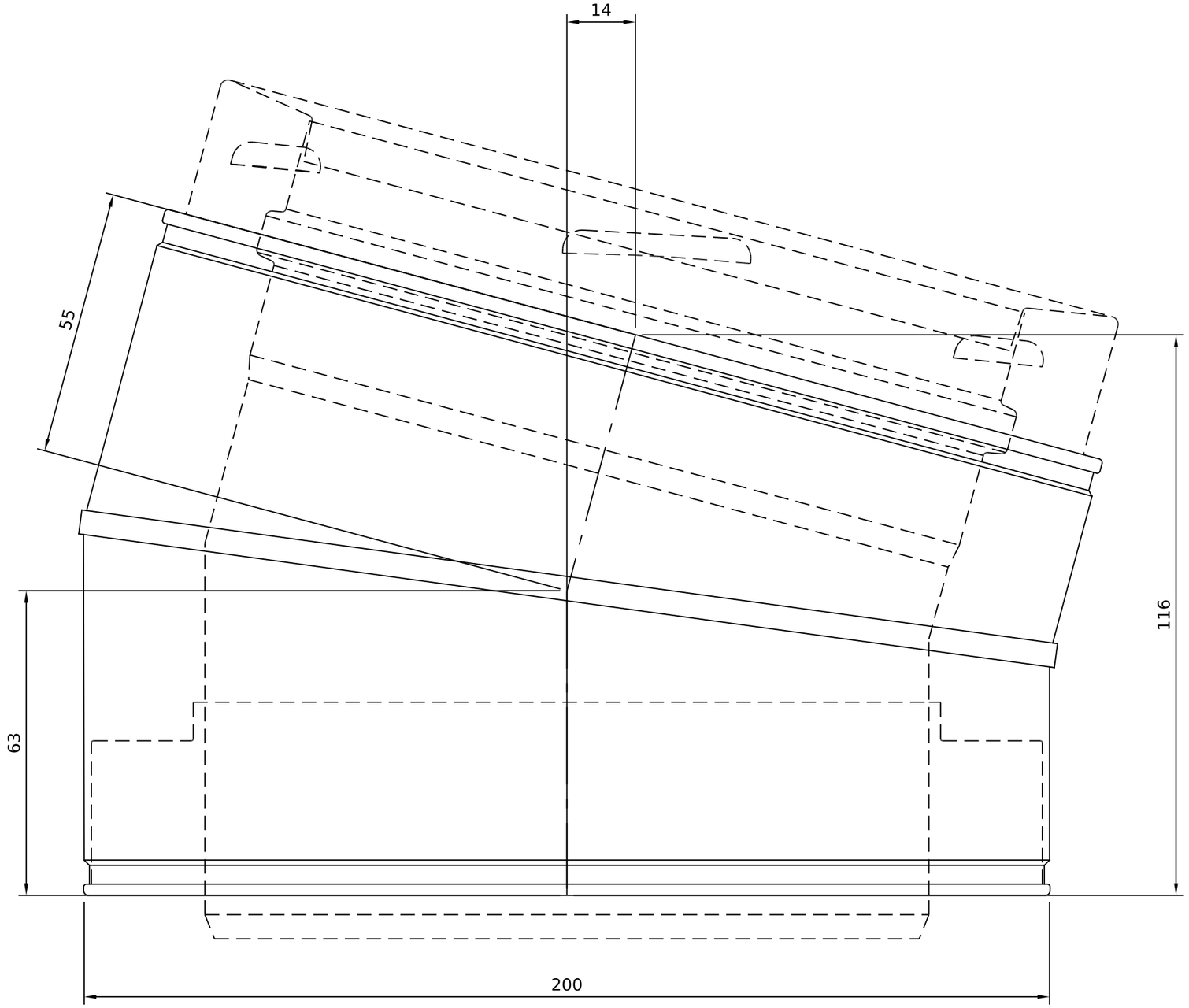

Effective lengths A 63.1 / B 54.86 (catalogue A 63 / B 56); offset 14.2 x 116.1

Part code 126022 | Size 150mm ID / 200mm OD | Finish: Stainless Steel | Scale 1:1 at A3 | Sheet 1 of 1

ICID+ Twin Wall Flue 15 Degree Bend, 150mm (6in), Stainless Steel (126022)

Dimensions in mm. Indicative only, check with us before construction. www.isokernshop.co.uk