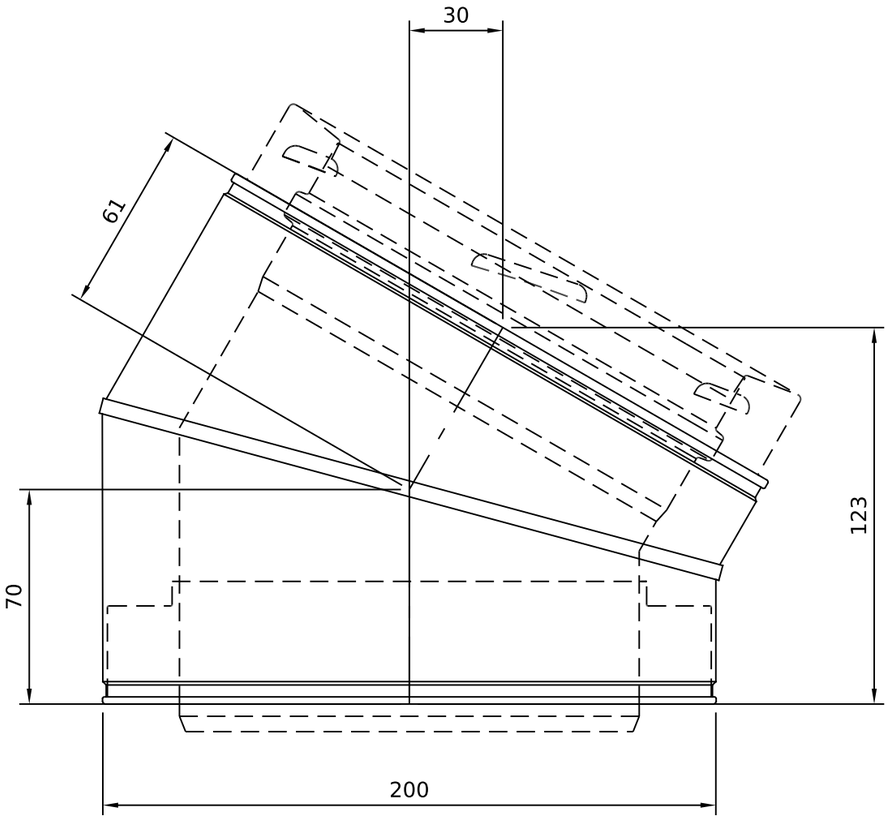

Effective lengths A 69.97 / B 61 (catalogue A 70 / B 61); offset 30.5 x 122.8

Part code 126031 | Size 150mm ID / 200mm OD | Finish: Black | Scale 1:2 at A3 | Sheet 1 of 1

ICID+ Twin Wall Flue 30 Degree Bend, 150mm (6in), Black (126031)

Dimensions in mm. Indicative only, check with us before construction. www.isokernshop.co.uk