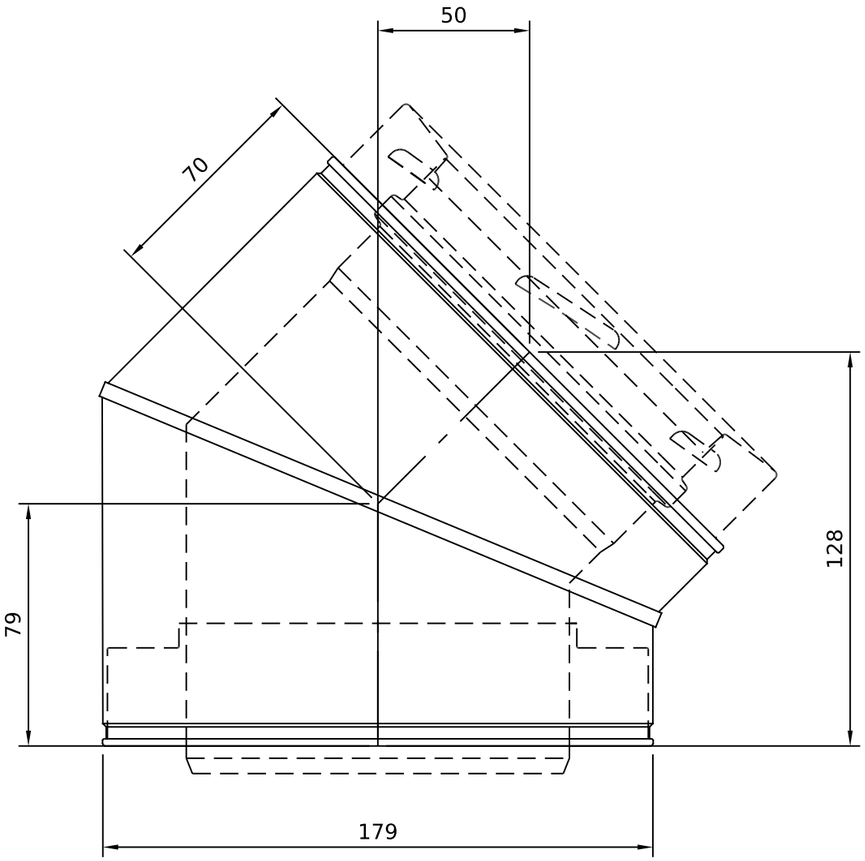

Effective lengths A 79 / B 70 (catalogue A 79 / B 70); offset 49.5 x 128.5

Part code 125267 | Size 125mm ID / 180mm OD | Finish: Stainless Steel | Scale 1:2 at A3 | Sheet 1 of 1

ICID+ Twin Wall Flue 45 Degree Bend, 125mm (5in), Stainless Steel (125267)

Dimensions in mm. Indicative only, check with us before construction. www.isokernshop.co.uk