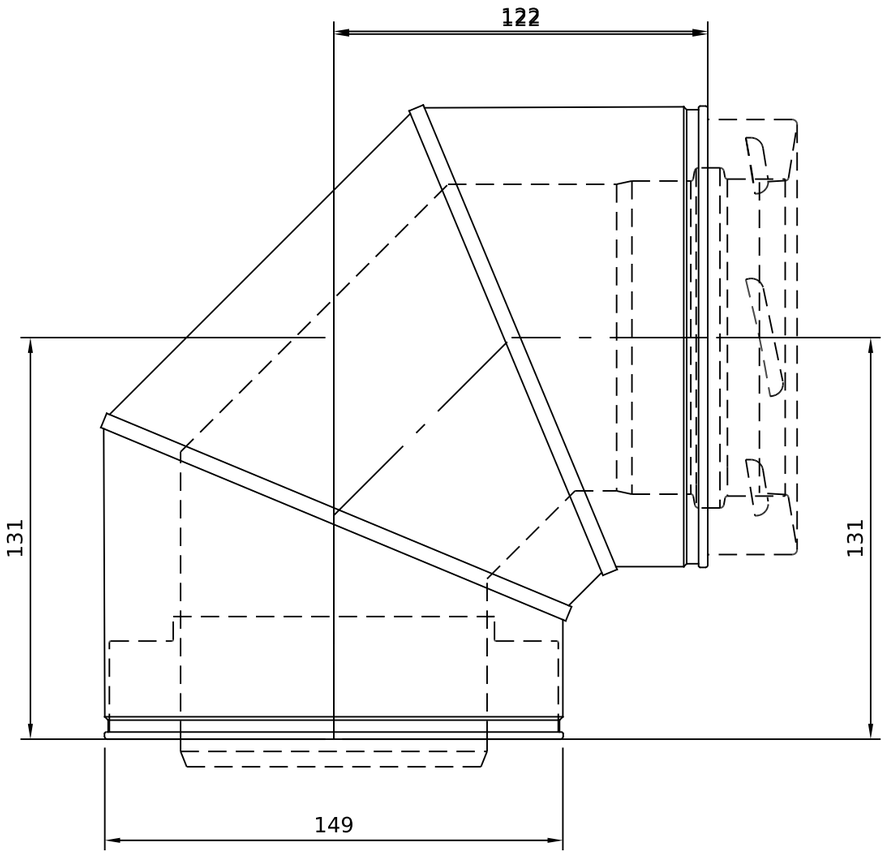

Effective lengths A 131 / B 122 (catalogue A 131 / B 122); offset 122 x 131

Part code 147375 | Size 100mm ID / 150mm OD | Finish: Stainless Steel | Scale 1:2 at A3 | Sheet 1 of 1

ICID+ Twin Wall Flue 90 Degree Bend, 100mm (4in), Stainless Steel (147375)

Dimensions in mm. Indicative only, check with us before construction. www.isokernshop.co.uk