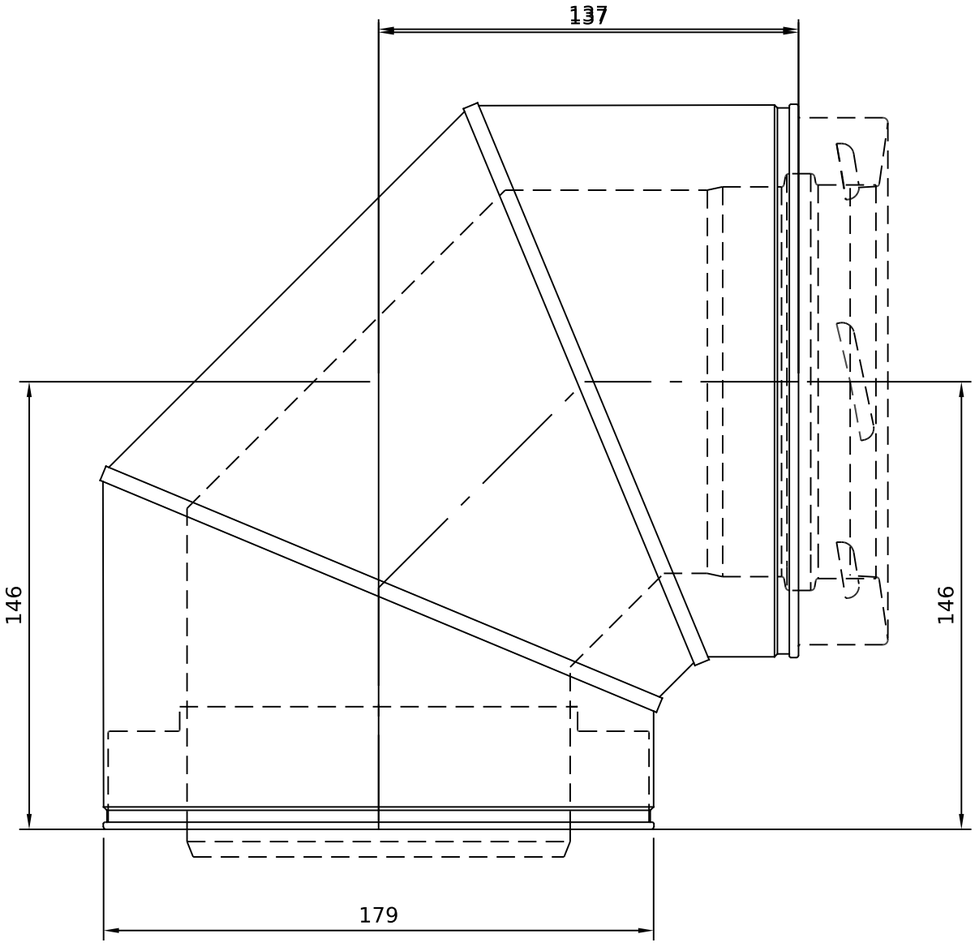

Effective lengths A 146 / B 137 (catalogue A 146 / B 137); offset 137 x 146

Part code 125277 | Size 125mm ID / 180mm OD | Finish: Stainless Steel | Scale 1:2 at A3 | Sheet 1 of 1

ICID+ Twin Wall Flue 90 Degree Bend, 125mm (5in), Stainless Steel (125277)

Dimensions in mm. Indicative only, check with us before construction. www.isokernshop.co.uk