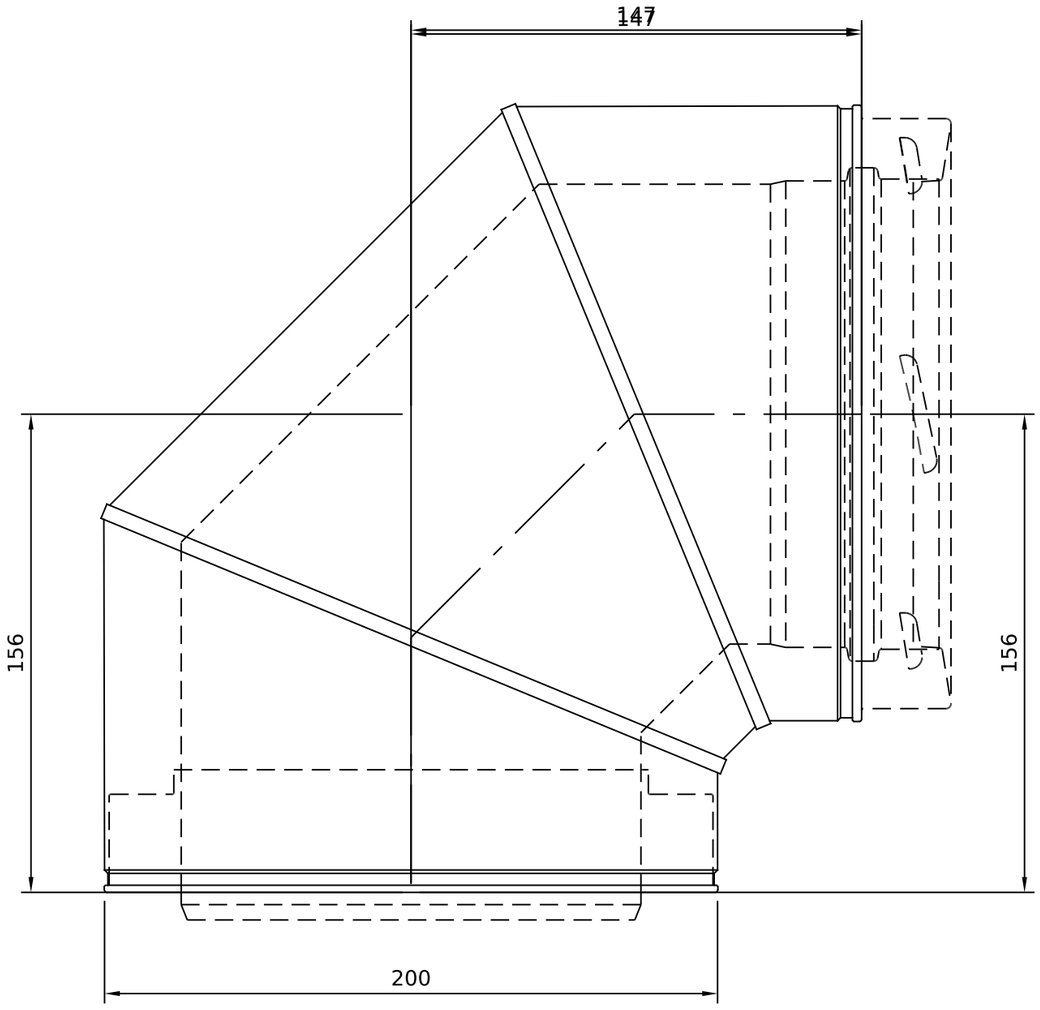

Effective lengths A 156 / B 147 (catalogue A 156 / B 147); offset 147 x 156

Part code 126049 | Size 150mm ID / 200mm OD | Finish: Stainless Steel | Scale 1:2 at A3 | Sheet 1 of 1

ICID+ Twin Wall Flue 90 Degree Bend, 150mm (6in), Stainless Steel (126049)

Dimensions in mm. Indicative only, check with us before construction. www.isokernshop.co.uk