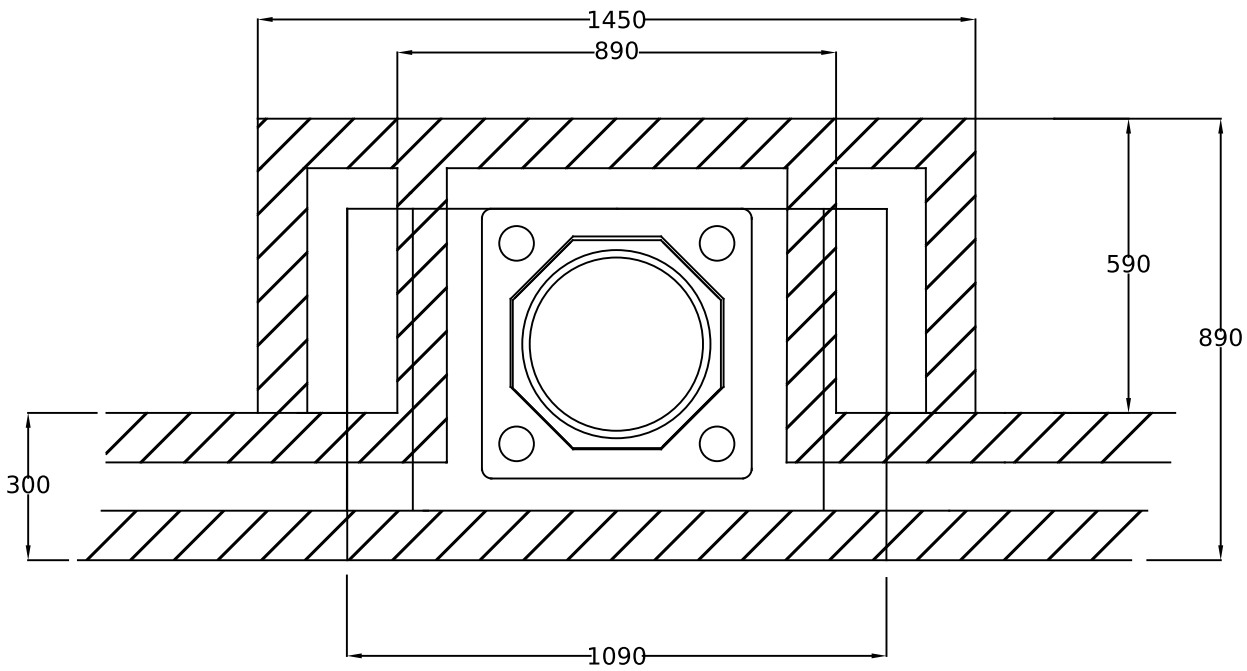

PLAN ABOVE FIRECHEST

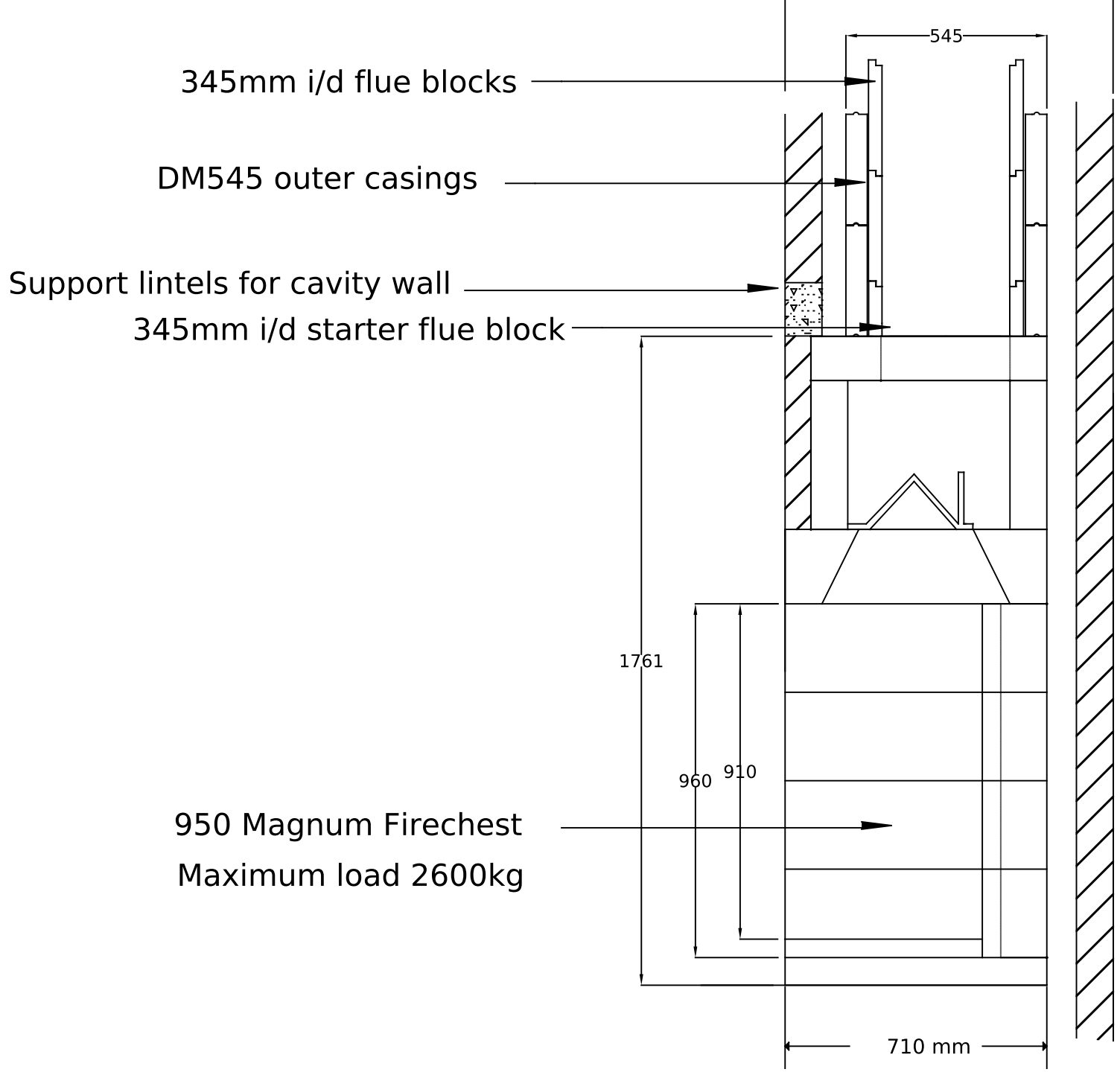

SIDE SECTION

DRAWING TITLE 950 MAGNUM FIRECHEST & DM54 CHIMNEY BUILT EXTERNALLY	

DRAWING NO	DM9A1 mag
SCALE	1:20
DATE	01-08-14