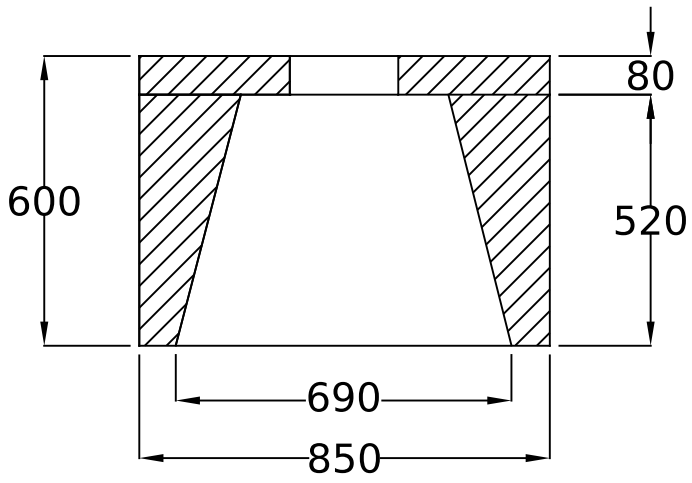

FRONT SECTION OF GATHER

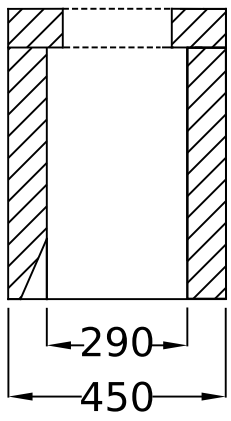

SIDE SECTION OF GATHER

MAXIMUM LOAD BEARING CAPACITY OF FIRECHEST & GATHER IS 2500KG

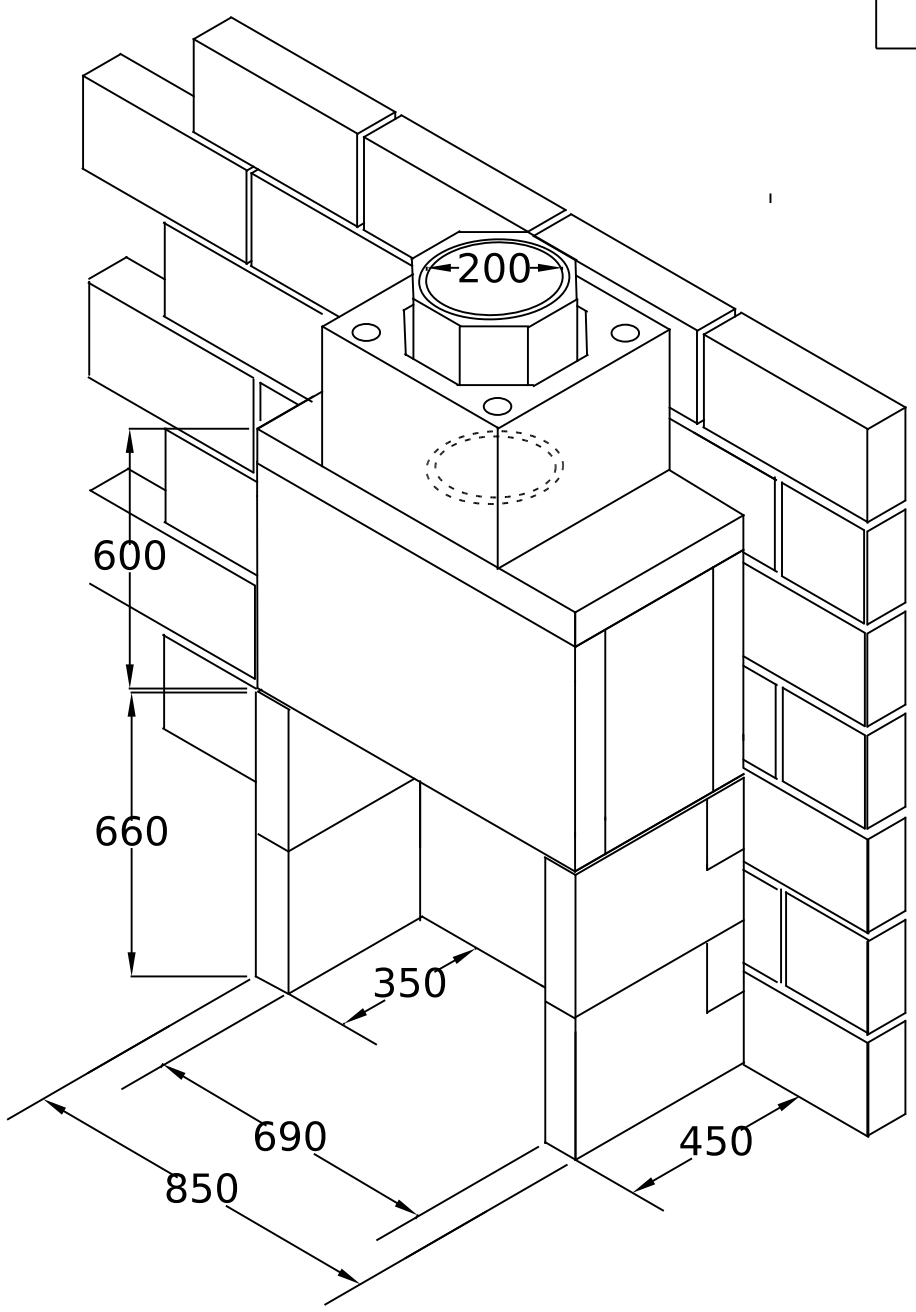

INSIDE FACE OF FIRECHEST MUST BE LINED WITH A SUITABLE FIREBACK OR FIREBRICK SLIPS

MAXIMUM FINISHED FIREPLACE OPENING SIZE TO BE 590mm BY 550mm HIGH

DRAWING TITLE ISOKERN STANDARD FIRECHEST AND GATHER WITH THE DM44 CHIMNEY SYSTEM	

DRAWING NO	DM
SCALE	NOT TO SCALE
DATE	01-08-14