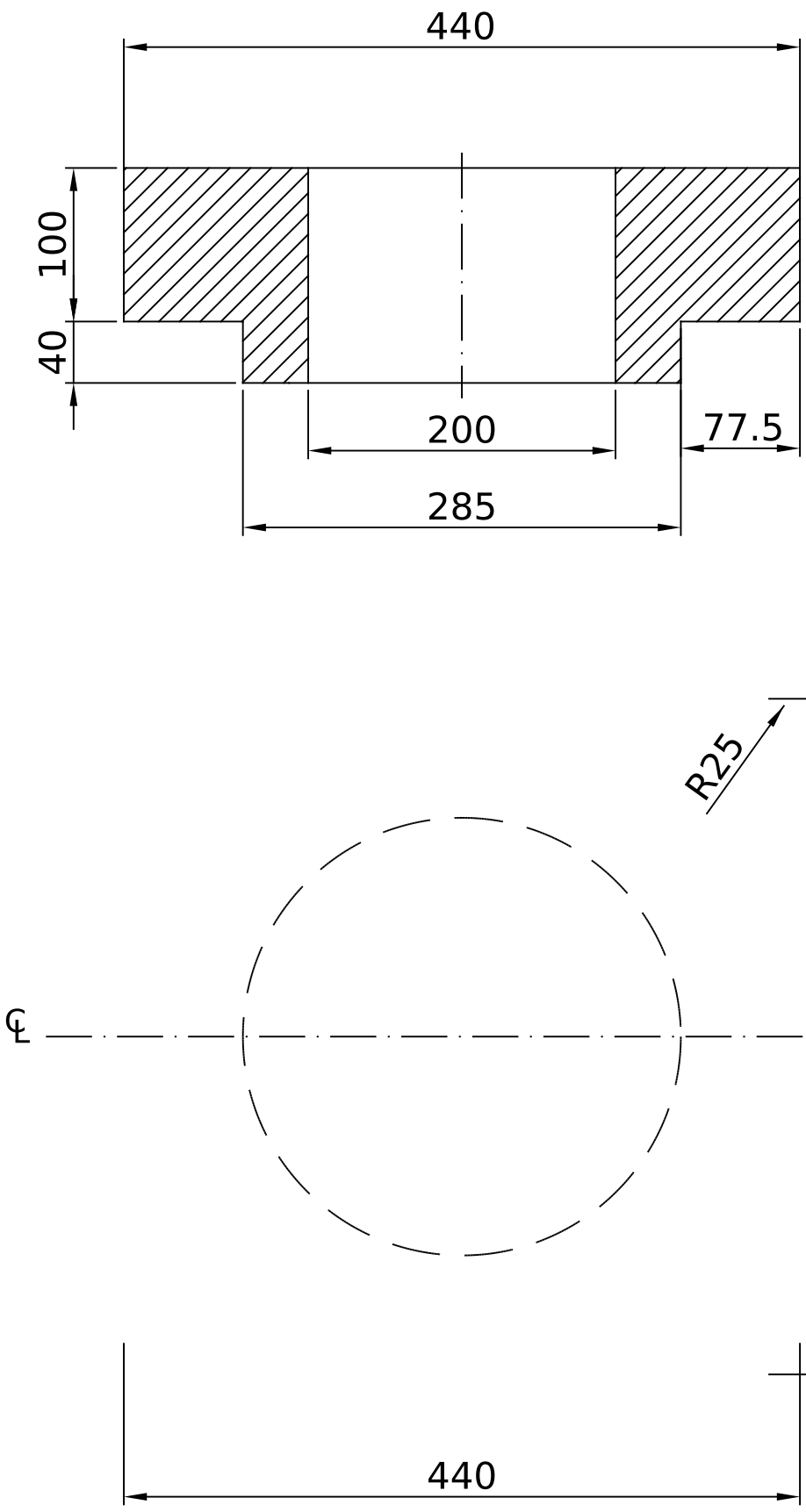

	Product: DM 44 Support Block, Ø200mm			
	Mat.: Pumice	Scale: 1:5	Dato: 051001	Part.nr.: 40128
Areal: 16,1648 dm^2	Tol.: ± 3 mm		Rev.: 100106	
Vol.: 17,460 l.				

Isokern DM44 200mm Support Block (130730)

Dimensions in mm. Indicative only, check with us before construction. www.isokernshop.co.uk