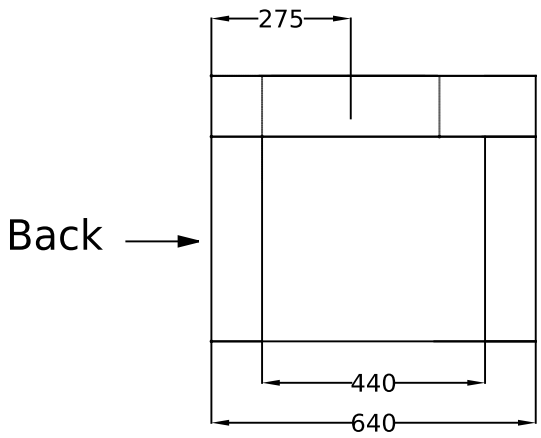

Side Section

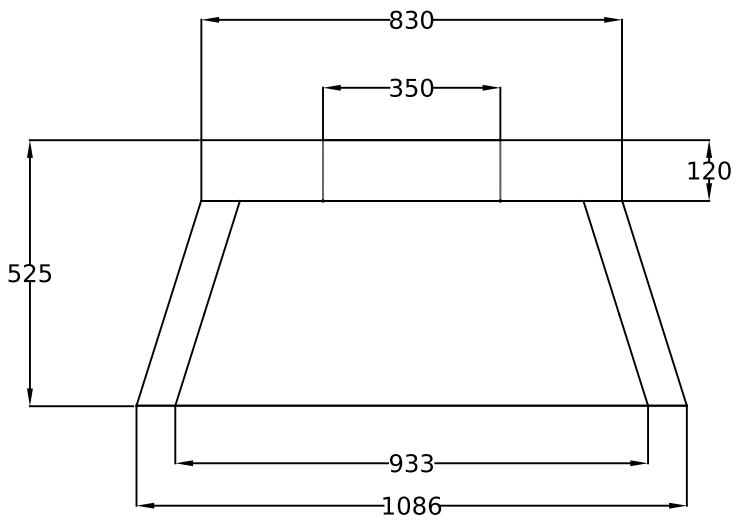

Front Section

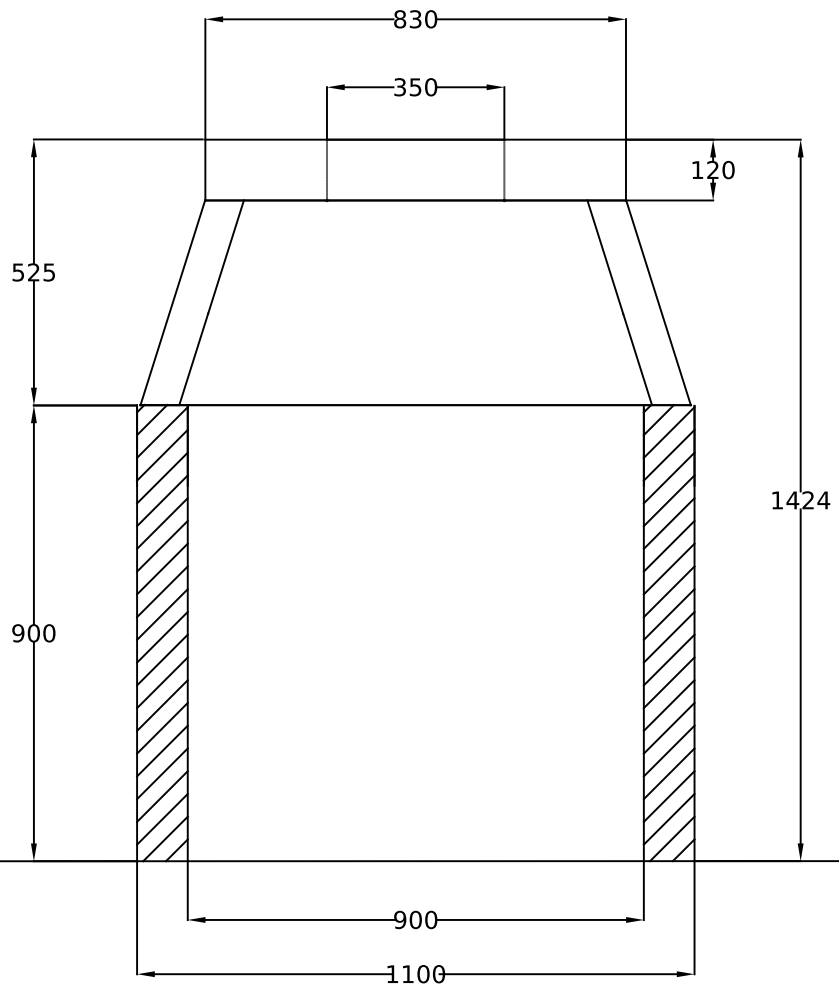

Front Section

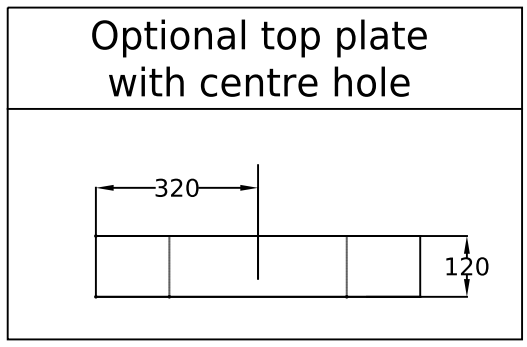

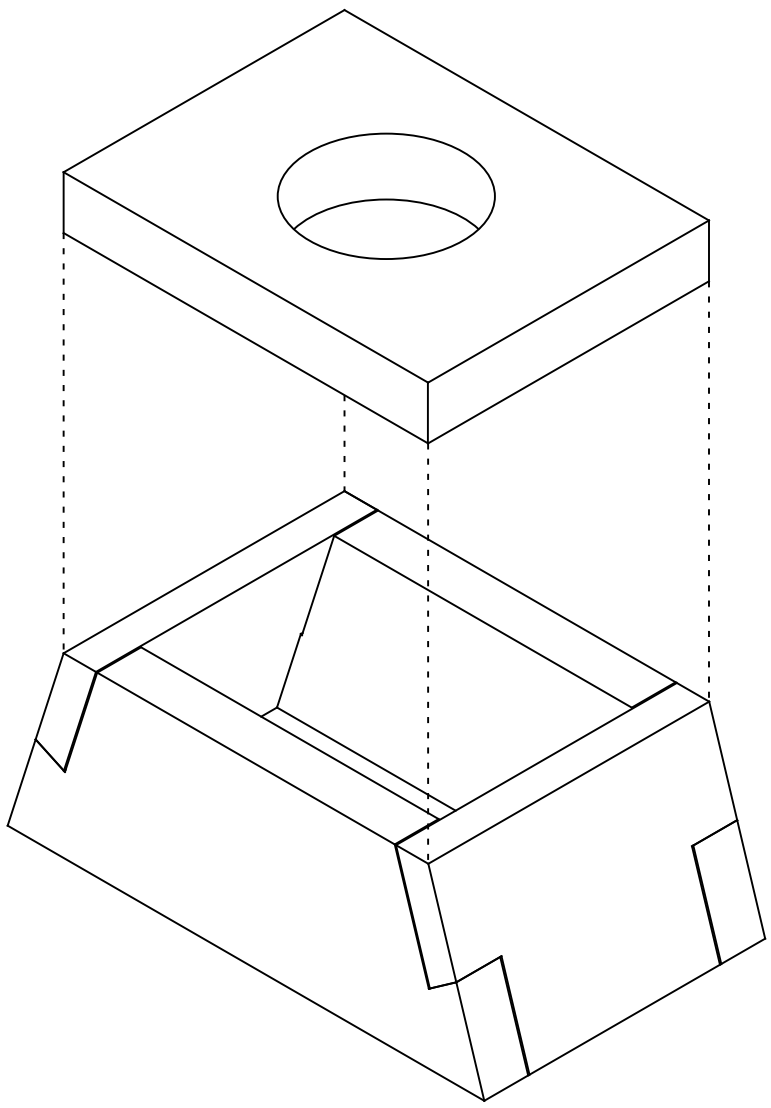

Max Load Capacity 2600kg

DRAWING TITLE

ISOKERN 900
PUMICE GATHER

DRAWING NO	85036
SCALE	1:20
DATE	5-1-15