

10825-300mm I/D 15DEG BENDS

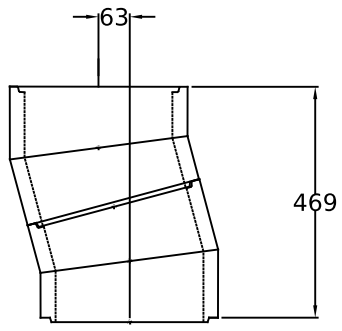

OFFSET DIMENSIONS PER PAIR

OFFSET DISTANCE WITH 1x600mm LENGTH OF LINER BETWEEN =218mm. OVERALL HEIGHT =1048mm

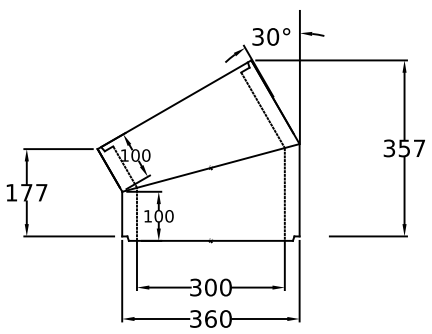

10826-300mm I/D 30DEG BENDS

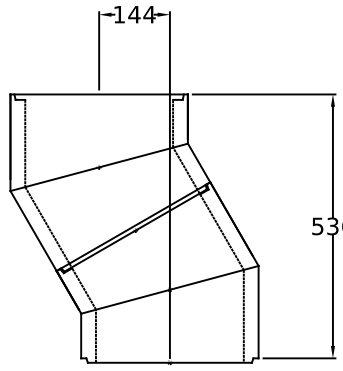

OFFSET DIMENSIONS PER PAIR

OFFSET DISTANCE WITH 1x600mm LENGTH OF LINER BETWEEN =444mm. OVERALL HEIGHT =1055mm

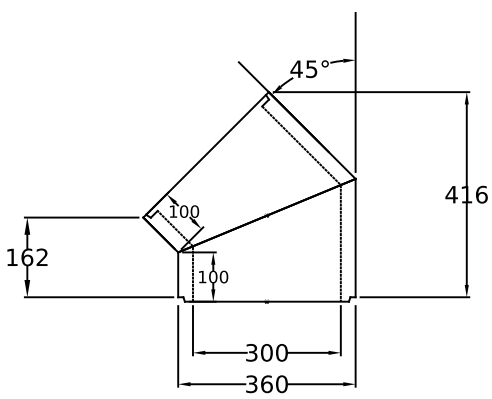

10827-300mm I/D 45DEG BENDS

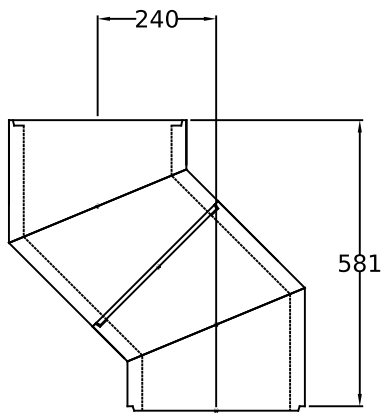

OFFSET DIMENSIONS PER PAIR

OFFSET DISTANCE WITH 1x600mm LENGTH OF LINER BETWEEN =665mm. OVERALL HEIGHT =1005mm

DRAWING TITLE

ISOKERN BEND CHART

300mm INTERNAL DIAMETER

14 HAVILAND ROAD
FERNDOWN INDUSTRIAL ESTATE
WIMBORNE, DORSET. BH21 7RF

DRAWING NO	300 BEND CHART
SCALE	1:20
DATE	26-4-2007