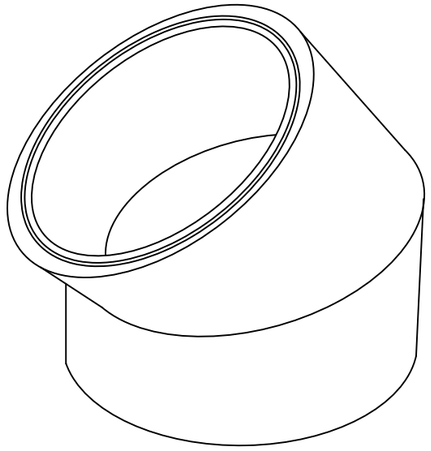

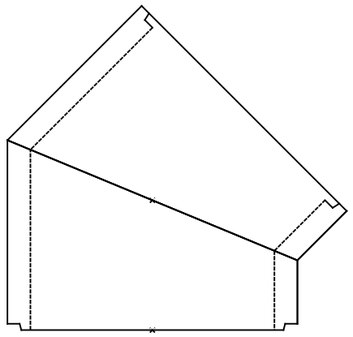

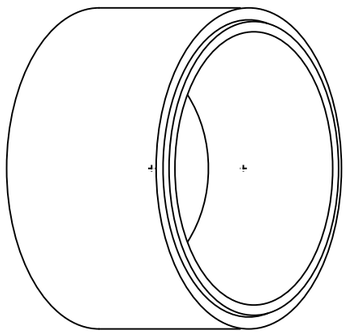

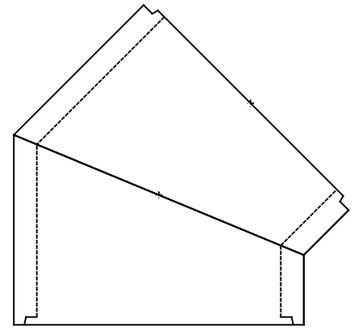

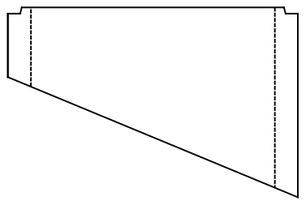

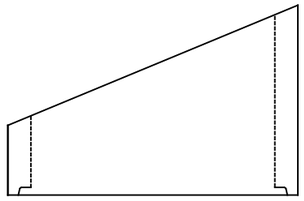

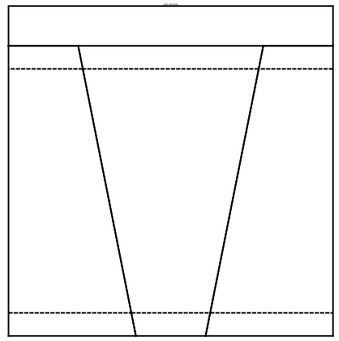

Isokern 350mm 45Deg Bend (131820)

Dimensions in mm. Indicative only, check with us before construction. www.isokernshop.co.uk