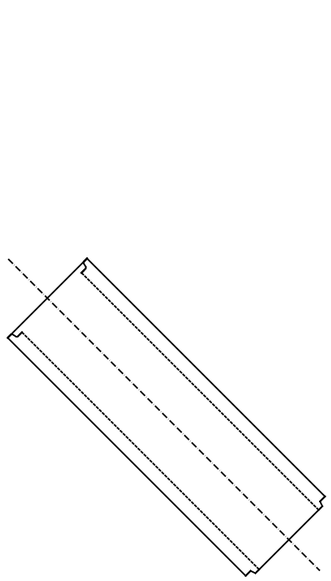

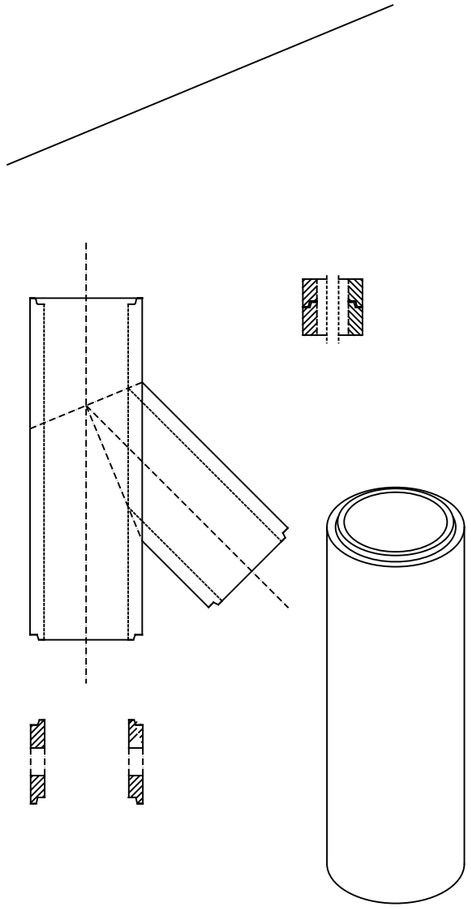

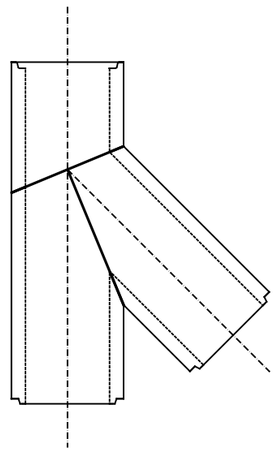

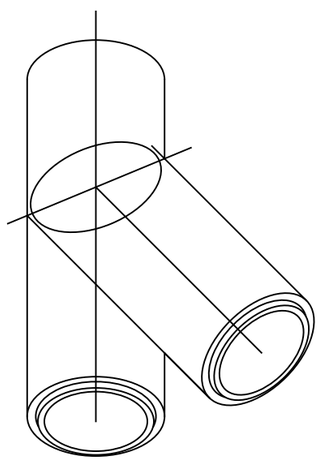

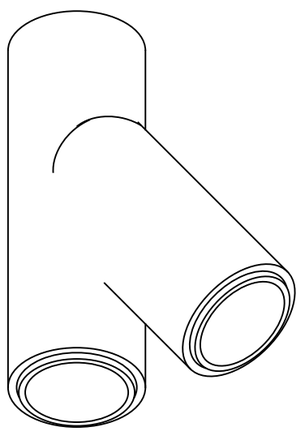

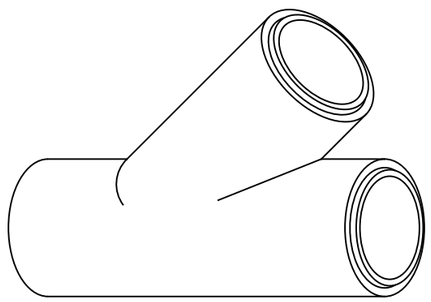

Isokern 150mm 45 degree T Liner (126376)

Dimensions in mm. Indicative only, check with us before construction. www.isokernshop.co.uk