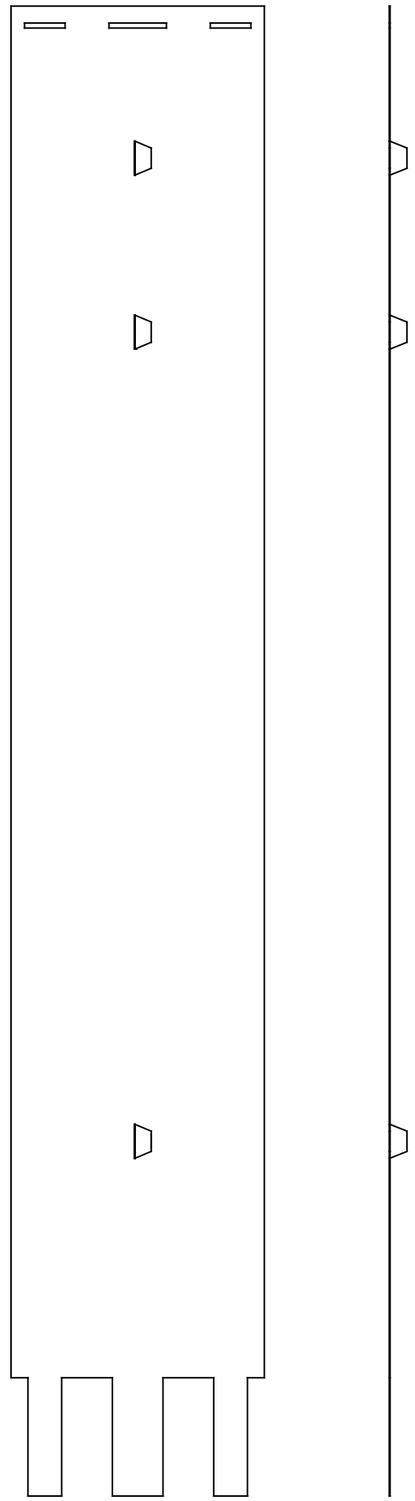

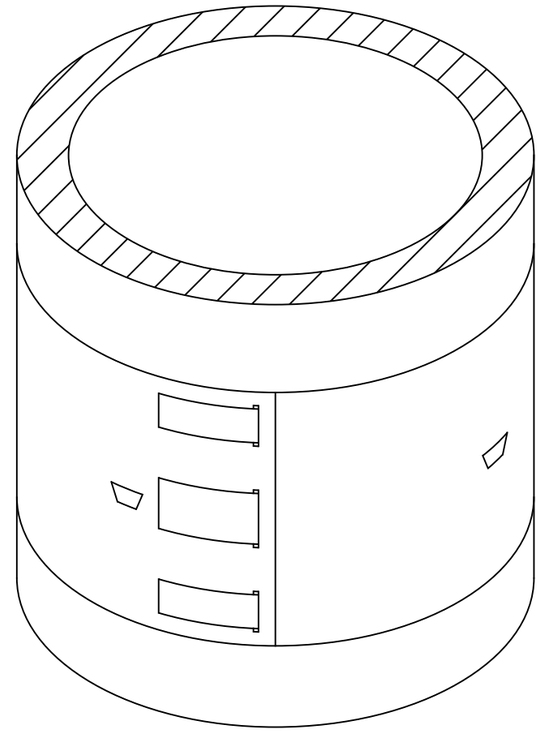

Isokern 200mm Collar (127673)

Dimensions in mm. Indicative only, check with us before construction. www.isokernshop.co.uk